Southbound I-680 Express Lane Electronic Toll System Request for Proposals

Released by:

Alameda County Congestion Management Agency
on behalf of the
Sunol Smart Carpool Lane Joint Powers Authority

Release Date: July 16, 2008

TABLE OF CONTENTS

1. ACRONYMS and GLOSSARY OF TERMS 8
2. INTRODUCTION AND PROCUREMENT OBJECTIVE 12
2.1 Introduction 12
2.2 General Description of the Project 12
2.3 Project Phases 12
2.4 Issuing Office 13
2.5 Sole Point of Contact 13
2.6 Mandatory Pre-Proposal Conference 13
2.7 Questions and Inquires 14
2.8 Submission Deadline 14
2.9 Duration of Offer 15
2.10 Bond Requirements 15
3. GENERAL INFORMATION AND CONTRACT PROVISIONS 16
3.1 Purpose 16
3.2 Revisions to RFP 16
3.3 Proposal Acceptance, Rejection, Discussion and Basis for Award 16
3.4 Oral Presentations 16
3.5 Best and Final Offer 17
3.6 Incurred Proposal Expenses 17
3.7 Proposal Form 17
3.8 California Public Records Act Notice 17
3.9 Software and Hardware Definitions 18
3.9.1 Confidential Information 18
3.9.2 Development Documents 18
3.9.3 Intellectual Property Rights 18
3.9.4 Express Lane Developments 18
3.9.5 Object Code 18
3.9.6 Personal Information 19
3.9.7 Release Event 19
3.9.8 Software 19
3.9.9 Software Documentation 19
3.9.10 Source Code 19
3.9.11 Special Hardware 19
3.9.12 Special Hardware Documentation 19
3.9.13 System Information 20
3.9.14 Third Party Software 20
3.10 Licenses 20
3.10.1 Object Code License 20
3.10.2 Source Code and Software Documentation License 20
3.10.3 Special Hardware Documentation License 21
3.10.4 Express Lane Developments License 21
3.10.5 License Limitations 21
3.10.6 Other License Terms 21
3.11 Third Party Licenses 22

3.12 Ownership and Protection of Confidential Information 22
3.12.1 Ownership 22
3.12.2 Confidential Information in Proposal and Development Documents 22
3.12.3 Protection 22
3.12.4 Exception from Non-Disclosure 23
3.12.5 Personal Information 23
3.12.6 Injunctive Relief 23
3.13 Escrow 23
3.13.1 Escrow Agreement 23
3.13.2 Release Events 24
3.13.3 Release 24
3.14 Insurance Requirements and Indemnity 24
3.14.1 Workers' Compensation 25
3.14.2 Comprehensive General Liability Insurance 25
3.14.3 Comprehensive Business Automobile Liability Insurance 25
3.14.4 Umbrella Liability Insurance 26
3.14.5 Other Requirements 26
3.14.6 Indemnification 26
3.15 Liquidated Damages 27
3.15.1 Liquidated Damages for Completion Delay 27
3.15.2 Maintenance Delay 27
3.15.3 Collection and Effect of Liquidated Damages 28
3.16 Incorporation by Reference 28
3.17 Retention of Records and Audits 29
3.18 Continuity of Services 29
3.19 Prompt Payment of Subcontractors 30
4. PROPOSAL REQUIREMENTS 31
4.1 Technical Proposal 31
4.1.1 Letter of Transmittal 31
4.1.2 Qualifications of Bidder 31
4.1.3 Work Plan 34
4.1.4 Technical Alternatives 35
4.1.5 Product Information 35
4.1.6 Bid/Proposal Security 35
4.2 Cost Proposal 36
4.2.1 Project Cost Alternatives 36
5. PROPOSAL REVIEW, EVALUATION AND SELECTION PROCESS 37
5.1 Proposal Evaluation and Selection Committee 37
5.2 Evaluation Criteria 37
5.3 Qualifying Proposals 39
5.4 Technical Evaluation 40
5.5 Cost Proposal Evaluation 40
5.6 Combined Evaluation 40
5.7 BAFO Evaluation 40
5.8 Recommendation for Award 41
5.9 Pre-Award Audit 41

5.10 Bid Protest Policy 41
5.10.1 Definitions 41
5.10.2 Notice Procedures 41
5.10.3 Form of Bid Protest 42
5.10.4 Submission of Bid Protest to the CMA 42
5.10.5 Investigation by Staff 42
5.10.6 Response to Bid Protest 43
6. PROJECT REQUIREMENTS 44
6.1 General Requirements 44
6.1.1 Life, Reliability, and Availability 44
6.1.2 Hardware Requirements 44
6.1.3 Applicable Codes and Contractor Requirements 47
6.1.4 Environmental Requirements 47
6.2 Roadside Equipment Requirements 48
6.2.1 FasTrak® ETC Subsystem 48
6.2.2 Tolling Zone Controllers 49
6.2.3 Vehicle Detection System Equipment 53
6.2.4 Dynamic Message Signs 54
6.2.5 Closed Circuit TV Subsystems 55
6.3 Enforcement Equipment Requirements 60
6.3.1 I-680 Express Lane System Enforcement Tools 60
6.4 Toll Data Center System requirements 63
6.4.1 Primary Functions of the TDC 64
6.4.2 System Data and Software Backups 71
6.5 Regional Customer Service Center Integration 71
6.5.1 BATA ICD 71
6.6 System Integration Requirements 72
6.6.1 System to System Interfaces 72
6.6.2 Equipment Interfaces 72
6.7 Communications Network 73
6.7.1 Tolling Zone to Tolling Zone 73
6.7.2 Tolling Zone to TDC 73
6.7.3 TDC to RCSC 74
6.7.4 TDC to Caltrans Traffic Management Center 74
6.7.5 TDC to System Enforcement Equipment 74
6.8 JPA Website Development 74
7. PROJECT MILESTONES 76
7.1 Project Phases 76
7.2 Project Schedule 77
7.3 Work Progress 78
7.4 Phase I – Coordination with Roadway Contractor(s) 78
7.5 Phase II – Design, Manufacturing, and Factory Test 79
7.6 Phase III – Installation, Testing, and Approval 81
7.7 Phase IV – System Performance Evaluation 84
7.8 Phase V – Warranty Period 85
7.9 Project Milestones 85

7.9.1 Detail Design Review 86
7.9.2 Factory Acceptance Test 86
7.9.3 Equipment Installation 86
7.9.4 System Acceptance Test 86
7.9.5 Final System Approval 86
7.9.6 Final System Acceptance 87
7.10 Optional Maintenance and Operation Periods 87
7.11 Quality Assurance 87
7.11.1 Quality Control Program 87
7.12 Design and Implementation 89
7.12.1 Documentation Requirements 90
7.12.2 Testing Requirements 94
7.12.3 Factory Acceptance Test, Procedures and Reporting 96
7.12.4 I-680 Express Lane System Acceptance Test 96
7.12.5 I-680 Express Lane System Acceptance Test Procedures 97
7.12.6 Express Lane System Acceptance Test Report 98
7.12.7 90-Day Operational Test 98
7.12.8 90-Day Operational Test Procedures 99
7.12.9 90-Day Operational Test Report 99
7.12.10 Performance Audit 99
7.12.11 Performance Audit Procedures 99
7.12.12 Performance Audit Report 99
7.13 Warranty Period and Maintenance Requirements 100
7.13.1 General 100
7.13.2 Maintainability Goals and Objectives of the JPA 100
7.13.3 Maintenance Analysis Requirements 101
7.13.4 Maintenance Personnel Experience Requirements 101
7.13.5 Maintenance Plan 102
7.13.6 Preventive Maintenance 103
7.13.7 Corrective and Emergency Maintenance 103
7.13.8 Spare Parts 103
7.13.9 Maintenance Transportation 104
7.13.10 Maintenance Facilities/Workshop 104
7.13.11 Maintenance On-Line Management System 104
7.13.12 Force Majeure Repairs 107
7.13.13 Maintenance and Service Manual 107
7.13.14 End of Warranty Period and Optional Maintenance and Operation Periods 108
7.14 Training Requirements 108
7.15 Project Payment Provisions 109
7.15.1 Retainage 109
7.15.2 Phase I – Coordination with Roadway Contractor(s) 109
7.15.3 System Software 109
7.15.4 Project Management 110
7.15.5 ETS Hardware 110
7.15.6 Documentation 110
7.15.7 Equipment Installation 110

7.15.8 Training 110
7.15.9 Warranty Period 111
7.15.10 Optional Maintenance and Operation Period(s) 111
8. COST PROPOSAL FORM 112
9. APPENDICES 116
9.1 I-680 Express Lane System Concept of Operations Document 116
9.2 I-680 Express Lane System Communications Plan 116
9.3 I-680 Express Lane Systems Engineering Management Plan 116
9.4 I-680 Express Lane System Enforcement Document 116
9.5 I-680 Express Lane System Requirements Document 116
9.6 I-680 Express Lane Electrical Plans 116
9.7 I-680 Express Lane Signing and Striping Plan 116
9.8 Maintenance of Traffic Plans (1 for each of the 3 Roadway Contracts) 116
9.9 I-680 Systems Integration Document Control Process Plan 116
9.10 BATA Regional CSC Interface Control Document (ICD) 116

TABLE OF FIGURES

Figure 1 – Preliminary Technical Proposal Evaluation Matrix 39
Figure 2 – Contractor Civil Work Responsibilities: VDS Loops, VDS RTMS 82
Figure 3 – Contractor Civil Work Responsibilities: DMS and Lighting, Tolling Zones 83
Figure 4 – Contractor Civil Work Responsibilities: CCTV, Highway and Sign Lights 83

TABLE OF TABLES

Table 1 – Repair/Response Times and Maintenance Liquidated Damages 28
Table 2 – Equipment MTBF and MTTR 44
Table 3 – Summary of Environmental Requirements 47
Table 4 – Solid State Color Camera Requirements 56
Table 5 – Camera Lens Requirements 57
Table 6 – Camera Assembly Requirements 57
Table 7 – Project Phases II, III, IV and V 77
Table 8 – Documentation Submittal Schedule 80
Table 9 – Project Milestones for Phases II, III, IV and V 86

KEY I-680 REQUEST FOR PROPOSAL DATES

RFP Issued	July 16, 2008	N/A
Pre-Proposal Conference*	August 20, 2008	10:00am PDT
Deadline for Submitting Questions	August 27, 2008	3:00pm PDT
Deadline for Proposal Submittal	September 17, 2008	3:00pm PDT
Interviews	Week of October 13, 2008	To Be Scheduled

* Attendance at Pre-Proposal Conference is Mandatory

1. ACRONYMS AND GLOSSARY OF TERMS

ACCMA	Alameda County Congestion Management Agency
ACTIA	Alameda County Transportation Improvement Authority
ASTM	American Society for Testing and Materials
AVI	Automatic Vehicle Identification
AVC	Automatic Vehicle Classification
BAFO	Best and Final Offer
BATA	Bay Area Toll Authority
Bidder	Any firm or company which submits a written technical and cost proposal in response to this RFP.
Caltrans	California Department of Transportation
CCTV	Closed Circuit Television
CCR	Camera Control Receiver
CHP	California Highway Patrol
CMP	Configuration Management Plan
Contract	The contract to be signed by the successful Bidder under this RFP
CSC	Customer Service Center – system and operation to be provided by the Systems Integrator where I-680 Express Lane questions will be addressed on behalf of the JPA.
CSR	Customer Service Representative
CTOC	California Toll Operators Committee
Customer	Person, company, or entity that applies and subscribes to the Bay Area Toll Authority for a FasTrak® Transponder for use in the HOT Lane.
DDD	Detailed Design Documentation
DMS	Dynamic Message Sign
DRDS	Dynamic Rate Display Sign
DSRC	Dedicated Short Range Communications
ED	Executive Director
ETC	Electronic Toll Collection
ETS	Electronic Toll System - The electronic collection of tolls utilizing an antenna and reader in the I-680 Express Lane and a transponder located on or in the vehicle. The antenna reads the transponder and the reader determines the ETC account number for toll payment purposes.

Express Lane	Another name for a HOT Lane
Express Carpool Lane	Another name for a HOT Lane
Express Lane System	The Express Lane System is all of the hardware and software that is required to effectively operate the I-680 Express Lanes.
Evaluation Committee	The people that will be selected by the JPA to review and evaluate each proposal and provide selection recommendations to the group.
FasTrak®	FasTrak® is the Electronic Tolling System that is utilized in California
FAT	Factory Acceptance Test
FCC	Federal Communications Commission
FIFO	First In First Out
FMAS	Facility Management and Accounting System
GP	General Purpose
GUI	Graphic User Interface
HOT Lane	High Occupancy Toll Lane is a freeway or expressway lane which is open to HOVs without a toll charge and also open to SOVs that pay a specified toll (also referred to in this RFP and other attached documents as the I-680 Express Lane or the Express Lane).
HOV	High Occupancy Vehicle
HOV Lane	High Occupancy Vehicle Lane
ITS	Intelligent Transportation System
JPA	Sunol Smart Carpool Lane Joint Powers Authority
LED	Light Emitting Diode
LOS	Level of Service
Maintenance Term	The Maintenance Term is the period in which the Systems Integrator shall be responsible for full hardware and software maintenance of the I-680 Express Lane System.
MER	Mobile Enforcement Reader
MF	Mixed Flow
MOMS	Maintenance Online Management System
MOT	Maintenance of Traffic
MTBF	Mean Time Between Failure - the mean calculated time, based on life cycle experience, between failures of an item or component.

MTTR	Mean Time To Repair - the mean time required to repair or replace an item; normally based on testing or actual field experience.
Non-Revenue Vehicle	Non-HOV authorized vehicles that are allowed to travel on JPA facilities free of charge.
NTCIP	National Transportation Communications for ITS Protocol
NTP	Notice to Proceed
PDA	Personal Digital Assistant
PDD	Preliminary Design Documentation
PTC	Permission to Commence
RCSC	Regional Customer Service Center
RTMS	Remote Traffic Microwave Sensor
RFID	Radio Frequency Identification
RF	Radio Frequency
RFP	Request for Proposal
Software	Software means any Source Code, Object Code, computer databases and any associated html and graphics files (other than Third Party Software that is separately licensed by the JPA) that are supplied to the JPA by the Systems Integrator under the Contract.
SOV	Single Occupancy Vehicle
Special Hardware	Special Hardware means any mechanical part and any piece of electrical or digital equipment that the Systems Integrator designs, develops or modifies for the Project, including, without limitation, lane controllers, hand-held reader devices, together with the written instructions necessary or appropriate to install and operate the Special Hardware.
Systems Integrator (SI)	The company who contracts with the JPA to provide the fully integrated ETS (excluding individual transponders) and all required services consistent with this RFP.
Systems Manager	The Systems Manager is the consultant that will, working closely with JPA staff, oversee the ETS design, development, integration, test, installation, operation and maintenance.
Tag	In-vehicle FasTrak® Transponder
TCP/IP	Transmission Control Protocol/Internet Protocol
Title 21	The Caltrans standard for Automatic Vehicle Identification Equipment, set forth in Title 21 of the California Code of Regulations, which must be followed by every electronic tolling system deployed in California

TDC	Toll Data Center - subsystem that will collect all roadside subsystem generated data and support the dynamic pricing process.
Tolling Zone	The Tolling Zone is the area at which the I-680 Express Lane FasTrak® roadside equipment is to be installed.
Transponder	A small in-vehicle electronic device, used for the payment of tolls, which contains a unique identification number.
TMC	Traffic Management Center
TZC	Tolling Zone Controller
UPS	Uninterruptible Power Supply
VDS	Vehicle Detection System
Violation	When an SOV not equipped with a FasTrak® transponder in good standing passes through a tolling zone or is in violation of the California Vehicle Code.
VTA	Santa Clara Valley Transportation Authority
WAN	Wide Area Network

2. INTRODUCTION AND PROCUREMENT OBJECTIVE

2.1 INTRODUCTION

The Sunol Smart Carpool Lane Joint Powers Authority (JPA) was created by AB 2032 to implement and operate a High Occupancy Toll Lane (HOT lane) over the Sunol Grade on Interstate 680. The Alameda County Congestion Management Agency (ACCMA) is the managing agency for the JPA and is responsible for planning, programming, and coordinating Federal, State, and Regional funds for transportation projects within Alameda County. The ACCMA along with the Alameda County Transportation Improvement Authority (ACTIA) and the Santa Clara Valley Transportation Authority (VTA) are the member agencies of the JPA. In addition to the programming duties, the ACCMA acts as project sponsor for certain projects or phases of projects in Alameda County.

2.2 GENERAL DESCRIPTION OF THE PROJECT

In order to provide better traffic flow on I-680 in Alameda County and northern Santa Clara County, a southbound high occupancy vehicle (HOV) lane will be converted to an HOT lane. The Project Limits are from just south of the State Route (SR) 84 Interchange near Pleasanton to just south of Calaveras Boulevard (SR 237) in Milpitas. The planned HOT lane is also known as the Southbound I-680 Smart Carpool Lane Project. The California Legislature and Governor under AB 2032 and the Federal Highway Administration (FHWA) authorized this conversion as a pilot project to improve travel efficiency in the corridor and provide more options to individual travelers.

The ACCMA has been authorized to convert the existing interim HOV lane in the southbound direction to a HOT lane on behalf of the JPA. The program name used throughout this RFP will be the I-680 Express Lane Project, which refers to the Southbound HOT lane conversion project. The California Department of Transportation (Caltrans) is responsible for the design and construction of the I-680 HOV Lane that will be converted into the HOT lane.

2.3 PROJECT PHASES

The I-680 Express Lane Project is divided into the following five (5) overall phases:

- **Phase I – Coordination with Roadway Contractor(s)** – This phase includes working closely with the Roadway Contractor(s) to ensure that their conduit and cable installation drawings are consistent with the Electronic Toll System (ETS) equipment and system design requirements;

- **Phase II – Design, Manufacturing, and Factory Test** – This phase includes the ETS design, development, equipment procurement/fabrication, component testing, integration testing and the conduct of a detailed Factory Acceptance Test (FAT) of the entire system;

- **Phase III - Installation, Testing, and Approval** – This phase includes ETS equipment and software installation, conduct of a comprehensive on-site System Acceptance Test and JPA/Systems Manager approval for the Express Lane System to be opened to traffic;

- **Phase IV – System Performance Evaluation** – This phase includes a performance evaluation period of 90 days which includes conduct of a 90-Day Operational Test under actual I-680 Express Lane operation, full ETS support, maintenance and operations by the SI; and

- **Phase V - Warranty Period** – This phase includes full ETS maintenance, operations and system support by the SI during a Warranty Period that shall extend 270 days after Phase IV approval, which would be granted upon successful system performance testing for a minimum period of 30 days of continuous error-free System operation.

2.4 ISSUING OFFICE

This Request for Proposals (RFP) is being issued on behalf of the JPA by the ACCMA:

Alameda County Congestion Management Agency (ACCMA)
1333 Broadway, Suite 220
Oakland, CA 94612

2.5 SOLE POINT OF CONTACT

The sole point of contact for all purposes of this procurement shall be the ACCMA's Contracts Administrator, Ms. Liz Brazil. Ms. Brazil's address and contact information is presented below:

Liz Brazil, Contracts Administrator
Alameda County Congestion Management Agency
1333 Broadway, Suite 220
Oakland, CA 94612
Email Address: lbrazil@accma.ca.gov

2.6 MANDATORY PRE-PROPOSAL CONFERENCE

A pre-proposal conference will be held on August 20, 2008, beginning at 10:00 a.m. PDT, in the ACCMA Committee Room at the address shown above. The pre-proposal conference will allow prospective Bidders to learn more about the project and to ask questions pertaining to the I-680 HOT Lane Project, the RFP, procurement process, etc.

Attendance at the pre-proposal conference is mandatory.

2.7 QUESTIONS AND INQUIRES

During the pre-proposal conference verbal questions will be accepted from prospective Bidders attending the conference. All verbal questions during the pre-proposal conference will be documented along with any responses given by means of an addendum to the RFP. Any verbal questions that cannot be answered fully during the pre-proposal conference will also be addressed as part of the addendum process. Any prospective Bidder finding a discrepancy in or omission from the RFP, or in doubt as to the meaning of any provision in the RFP, must raise the issue(s) at the pre-proposal conference.

Other questions, inquiries, discrepancies or omissions, including those arising subsequent to the pre-proposal conference, must be submitted in writing and received by the ACCMA Contracts Administrator by the close of business (local time) on August 27, 2008 at the address referenced in Section 2.5, with the phrase "Southbound I-680 Express Lane ETS RFP" prominently typed on the face of the envelope. Questions may also be transmitted via email to the ACCMA Contracts Administrator. All such emails must include the subject line "Southbound I-680 Express Lane ETS RFP Question:" and then the stated question in the body of the email. It is up to the Bidder to confirm that the email was received by the ACCMA Contracts Administrator. The JPA is not obligated to change the RFP in any way, but questions affecting the content of the RFP in a material way, or clarifying the intent, will be answered by means of an addendum to the RFP, which will be made available on the ACCMA's website to all of those companies that were represented at the pre-proposal meeting. The JPA will not be responsible for communications concerning this RFP which are not in writing or are not made at the pre-proposal meeting.

2.8 SUBMISSION DEADLINE

To be considered, proposals must be received by the ACCMA Contracts Administrator at the address referenced in Section 2.5 **no later than 3:00 PDT on September 17, 2008.** Bidders who submit their proposals by mail should allow sufficient mailing and internal delivery time to ensure timely receipt by the ACCMA Contracts Administrator. Proposals or unsolicited amendments to proposals arriving after the closing date and time will be rejected and returned unopened.

Bidders shall complete and submit their proposals on the forms furnished with the RFP. All proposal forms are to be signed by an individual authorized to bind the Bidder, notarized if so indicated, placed in the appropriate envelope or package, and directed to the ACCMA Contracts Administrator at the address referenced in Section 2.5.

Technical Proposals and Cost Proposals must be submitted in separate sealed envelopes or packages addressed to the ACCMA Contracts Administrator and clearly marked as to their contents, (e.g., "Technical Proposal, Southbound I-680 Express Lane ETS RFP" or "Cost Proposal, Southbound I-680 Express Lane ETS RFP"), and received by the ACCMA Contracts Administrator at the address referenced in Section 2.5 no later than the time and date referenced above. If the separate Technical Proposal and Cost Proposal envelopes or packages are mailed or delivered in one larger envelope or package, the words "Southbound I-680 Express Lane ETS RFP" must be prominently typed on the face thereof. Failure to submit the proposals in the manner requested may result in the proposal being rejected as unacceptable.

Proposals shall not be opened publicly, and the identity of a Bidder shall not be disclosed prior to contract award.

2.9 DURATION OF OFFER

Proposals and, if required, Best and Final Offers (BAFOs) submitted in response to this solicitation are irrevocable for a period of 90 days following the closing date for the receipt of proposals and/or the BAFO(s). This period may be extended if requested by the ACCMA Contracts Administrator and agreed to by a Bidder, in writing.

2.10 BOND REQUIREMENTS

The successful Bidder (Systems Integrator) shall be required to furnish, at the time of award of the Contract, a Performance Bond in the full amount of the Contract.

Acceptable security for the performance bond shall be limited to:

- A Bond in a form satisfactory to JPA, underwritten by a surety company authorized to do business in the State of California. Attached to this RFP is the JPA Bond form that should be utilized by the Bidders (the Bond Form will be provided with the Final version of the RFP);

- A bank certified check, bank cashier's check, bank treasurer's check, or trust account; or

- A pledge of securities backed by the full faith and credit of the United States Government or bonds issued by the State of California.

3. GENERAL INFORMATION AND CONTRACT PROVISIONS

3.1 PURPOSE

The purpose of this section is to provide information to Bidders interested in preparing and submitting proposals to provide the Express Lane System including design, development, integration, implementation, maintenance and operations in accordance with the requirements set forth in this document and its references.

3.2 REVISIONS TO RFP

If it becomes necessary or desirable to revise any part of this RFP, or to provide additional information to enable potential Bidders to interpret its provisions, the JPA will issue an addendum which will be provided to each person who is known to have received a copy of the RFP and whose company was represented at the pre-proposal meeting. Acknowledgement of the receipt of any and all addenda will be required of Bidders, and shall accompany the Bidder's Technical Proposal.

3.3 PROPOSAL ACCEPTANCE, REJECTION, DISCUSSION AND BASIS FOR AWARD

The JPA reserves the right to accept or reject, in whole or in part, any and all proposals received in response to this RFP; to waive or permit cure of minor irregularities, and to conduct discussions with all qualified Bidders who have submitted acceptable proposals, in any manner necessary to serve the best interests of the JPA. The JPA also reserves the right, at its sole discretion, to award (or not to award) a contract based upon the written proposals received, without discussions or negotiations.

Award of the contract will be subject to the approval of the Executive Director (ED) of the JPA.

3.4 ORAL PRESENTATIONS

Bidders may be required to make one or more oral presentations in order to clarify their proposals and to respond to the questions of the Evaluation Committee. Only Bidders that submit proposals that have been judged to be compliant with the RFP requirements and, therefore, eligible to be considered for selection, will be invited to make oral presentations. Oral presentations may be sound and/or video recorded for the exclusive use of the Evaluation Committee and associated JPA members. The oral presentations will be scheduled at the convenience of the JPA after the initial review and as part of the overall evaluation of the proposals.

3.5 BEST AND FINAL OFFER

The JPA reserves the right to request Best and Final Offers (BAFOs) from any or all of the Bidders. If the BAFO process is utilized, the JPA may enter into discussions with one or more Bidders and request a BAFO document from such Bidders, or the JPA may request BAFO(s) without first discussing any issues with the selected Bidder(s). All Bidders that might be selected to participate in discussions with the JPA shall be advised of any deficiencies in their proposals, and JPA may issue a change in the scope of the work or to other provisions of the Contract documents. The selected Bidder shall be offered a reasonable opportunity to correct or resolve any deficiencies and to submit such cost and/or other technical revisions to their proposals that may result from the discussions. At the conclusion of the discussions, a final common cut-off date which allows a reasonable opportunity for submission of written final revisions shall be established, and those Bidders that are selected to remain in contention for the Contract will be notified, in writing, to submit proposal revisions. The JPA will consider the revised cost and/or technical information and re-evaluate and possibly revise the proposal ratings as might be appropriate.

3.6 INCURRED PROPOSAL EXPENSES

The JPA will not be responsible for any costs incurred by a Bidder in preparing and submitting a response to this RFP, or for any other associated costs, including attendance at the pre-proposal meeting, representation at the oral presentation, attendance at BAFO meeting(s), etc.

3.7 PROPOSAL FORM

Proposals should be prepared simply and economically, providing a straightforward and clear description of the Bidder's proposal for meeting the requirements of this procurement. Proposals shall meet all of the requirements that are presented in Section 4 of this RFP. Oral, facsimile, or electronic proposals or amendments will not be accepted unless specifically requested in writing by the ACCMA Contracts Administrator.

One original, fifteen (15) type-written copies, and one (1) CD copy of the Bidder’s proposal shall be received by the ACCMA Contracts Administrator at the time and on the date as previously stated in this RFP in Section 2.8. The proposal of each Bidder shall be developed using 12-font size text and shall be signed by a corporate officer, partner, proprietor, or other person authorized to legally bind the Bidder.

3.8 CALIFORNIA PUBLIC RECORDS ACT NOTICE

Each Bidder should give specific attention to the identification of those portions of its proposal that it considers to be confidential, proprietary commercial information or trade secrets, and provide justification as to why such materials, upon request, should not be disclosed by the JPA under the California Public Records Act, California Government Code Sections 6250, *et seq*.

3.9 SOFTWARE AND HARDWARE DEFINITIONS

The definitions below are to be used with the license, confidential information and escrow provisions in Sections 3.10 through 3.13 of this RFP.

3.9.1 Confidential Information

Confidential Information with respect to a person or entity means information, knowledge or data, whether in written, oral, visual, machine recognizable or electronic form, which provides independent economic value to such person or entity from (i) not being generally known in the relevant trade or industry or (ii) not being generally known to, or readily accessible by proper means by, competitors of such person or entity and other persons who can obtain economic value from them, including, without limitation, information about the dynamic pricing algorithms and information from third parties and all other information which a person or entity has a reasonable basis to know was created, modified or used and held secret by another party or that was accepted by such other person or entity from any third party under an obligation of confidentiality. Notwithstanding the foregoing, Confidential Information shall not include: (i) information which a party (the "Recipient") can demonstrate by its files was already in the possession of such party prior to receipt of such information from the other party (the "Disclosing Party") (provided that access to such information was gained by the Recipient from a third party which had the right to disclose such information without restriction), (ii) information which is in the public domain prior to the date of the Contract, (iii) information which, not as a result of the disclosure by the Recipient, becomes part of the public domain after disclosure, and (iv) information which is hereafter lawfully disclosed to Recipient by a third party (other than any employees or agents of either party) who is not under an obligation to maintain the confidentiality of the information.

3.9.2 Development Documents

Development Documents mean those documents that are delivered to the JPA by the SI during the system design, development and implementation processes.

3.9.3 Intellectual Property Rights

Intellectual property rights means any and all legal rights regarding intangible property existing from time to time under domestic and international patent law, copyright law, moral rights law, trade secret law, trademark law, unfair competition law or other similar rights.

3.9.4 Express Lane Developments

Express Lane Developments means: (i) those portions of the Software and the Special Hardware that were developed under the Contract to satisfy the specifications or requirements of the Express Lane project; (ii) those modifications of pre-existing software and hardware that were made to satisfy the specifications or requirements of the Express lane project, and (iii) any changes to the foregoing that are made in response to requests by the JPA or to address the changing needs of the Express lane project.

3.9.5 Object Code

Object Code means: (i) the machine readable code version of the Software, which is substantially or entirely in binary form and is intended to be executable by a computer after suitable

processing or linking but without intervening steps of compilation or assembly; and (ii) the written instructions necessary or appropriate for the JPA to install and use the Object Code form of the Software for the Express Lane System.

3.9.6 Personal Information

Personal Information means information that identifies individual Express Lane System users, such as the user's name, address, telephone number, email address, credit card number and expiration date and license plate number.

3.9.7 Release Event

Release Event has the meanings specified in Sections 3.13.2 and 3.13.3.

3.9.8 Software

Software means any Source Code, Object Code, computer databases and any associated html and graphics files (other than Third Party Software that is separately licensed by the JPA) that are supplied to the JPA by the SI under the Contract, together with all enhancements, improvements and modification to the foregoing.

3.9.9 Software Documentation

Software Documentation means the Source Code on industry standard media and source code listings in human readable form of all Software including logic equations for programmable array logic integrated circuits (as well as the compiler or assembler and associated software tools for the Source Code); all design documents, specifications, flow charts, data flow diagrams and other materials or documents which explain the performance, function or operation of individual software programs and the interaction of programs within the Express Lane System; all control files and scripts used to compile link, load and/or make the applications and systems, test scripts, test plans and test data; all password security codes and any other information and documents necessary to operate and maintain the Software.

3.9.10 Source Code

Source Code means the computer programming code (other than binary code) and any procedural code such as job control language, which may be printed out or displayed in human readable form.

3.9.11 Special Hardware

Special Hardware means any mechanical part and any piece of electrical or digital equipment that SI designs, develops or modifies for the Project, including, without limitation, lane controllers, hand-held reader devices, together with the written instructions necessary or appropriate to install and operate the Special Hardware.

3.9.12 Special Hardware Documentation

Special Hardware Documentation means the documents that contain the necessary to have the Special Hardware manufactured and supplied to the JPA, including, without limitation, the manufacturing drawings, data and specifications of the equipment and spare parts and of their

tools, dies, and fixtures, including art work necessary to fabricate circuit boards; license(s) to all applicable Intellectual Property, if any; all drawings from top level equipment outline, interface and mounting, through assembly, sub-assembly, and fabricated piece parts drawings necessary to manufacture the equipment; all schematics and wiring diagrams and cable harness drawings; all installation, configuration, and layout drawings; all block diagrams and family trees; all assembly instructions and drawings; all test specifications for top-level equipment and for all assemblies to the lowest testable level of assembly; all test procedures for all tests; all maintenance manuals and procedures; all operator manuals; all flow charts relevant to the manufacture, assembly, programming, and operation of the equipment; part lists containing sufficient information to procure all parts and material required to manufacture the equipment from its primary source, except software products available commercially; documentation for the source code if not provided otherwise; all password security codes and any other information and documents necessary to manufacture and maintain the Special Hardware. Notwithstanding the foregoing, the Special Hardware Documentation does not have to include the information necessary to manufacture any Special Hardware part that is generally commercially available from at least two suppliers.

3.9.13 System Information

System Information means the Software Documentation and the Special Hardware Documentation.

3.9.14 Third Party Software

Third Party Software means computer programs, computer databases and any associated html and graphics files that are not owned by the SI and are necessary for the proper functioning of the I-680 Express Lane System.

3.10 LICENSES

The provisions below substantially set forth the terms of the licenses that must be granted to the JPA:

3.10.1 Object Code License

The SI shall grant the JPA a fully-paid, perpetual, non-exclusive, irrevocable royalty-free right and license to use, copy, perform and sublicense the Software in Object Code form in connection with the installation, operation, maintenance and improvement of the Express Lane System.

3.10.2 Source Code and Software Documentation License

The SI shall grant the JPA a fully-paid, perpetual, non-exclusive, irrevocable royalty-free right and license to use, copy, perform, modify and sublicense, and create derivative works of, the Software in Source Code form (including, without limitation, the right and license to assemble or compile the foregoing into Object Code form) and the Software Documentation, as deemed necessary or appropriate by the JPA to operate, maintain and improve the Express Lane System. Included in this license are the rights to decompile, disassemble or reverse engineer the Software. The license rights granted in this Section 3.10.2 may not be exercised until a Release Event has occurred, at which time they may be exercised automatically without the requirement of further action by the JPA or the SI.

3.10.3 Special Hardware Documentation License

The SI shall grant the JPA a full-paid, perpetual, non-exclusive, irrevocable right and license to use, copy, perform, modify and sublicense, and create derivative works of the Special Hardware Documentation, as deemed necessary or appropriate by the JPA to operate, maintain, manufacture and procure the Special Hardware.

3.10.4 Express Lane Developments License

Notwithstanding the non-exclusivity provisions of Sections 3.10.1, 3.10.2 and 3.10.3, the SI shall grant the JPA a fully-paid, perpetual, exclusive, irrevocable royalty-free right and license to use, copy, perform, modify and sublicense, and create derivative works of, the Express Lane Developments in connection with the installation, operation, maintenance and improvement of the Express lane System.

3.10.5 License Limitations

In exercising its rights under Section 3.10.1 through Section 3.10.4, the JPA shall not license, sublicense, sell, resell, transfer, assign, distribute or modify the Software for use with any highway or transportation structure other than those under the jurisdiction of the JPA.

3.10.6 Other License Terms

1. All modifications, improvements and enhancements to the Software shall be licensed to the JPA without any additional charge to the JPA.
2. The JPA shall have the right, in it discretion, either to contract with the SI for maintenance services and customer services; to provide its own maintenance services and customer services; or, to contract with others for the maintenance services and/or customer services.
3. The SI shall deposit in escrow pursuant to the Escrow Agreement (See Section 3.13) all Source Code, Software Documentation and Special Hardware Documentation for the Software and the Special Hardware and for all modifications, improvements and enhancements to the Software and the Special Hardware.
4. After a Release Event, the JPA shall be entitled to make its own modifications, improvements and enhancements to the Software or to contract with others to make such modifications or improvements, which modifications, improvements and enhancements the JPA may use in connection with the system and the systems of its member organizations.
5. The SI shall indemnify the JPA against any infringement by the software of any patent, copyright, trademark or trade secret of any other party.
6. The SI shall provide maintenance services and other services for the period described in the Contract.
7. The SI shall supply to the JPA any new software products which may be useful in the operation of the Express Lane System on a most favored customer basis.
8. The SI shall represent and warranty that the Software, the Special Hardware and the System Documentation comply with all requirements of the Contract, do not infringe the Intellectual Property Rights of any third party, do not, the case of the Software, contain

any "virus," illicit code or defect. The SI shall also make other standard representations and warranties customary in a contract of this nature and scope.

3.11 THIRD PARTY LICENSES

The SI shall provide the JPA with fully-paid, non-exclusive, perpetual, irrevocable, royalty-free licenses to use the Third Party Software as necessary or appropriate for the JPA to operate, maintain and improve the Express Lane System. All such Third Party Software licenses shall provide for the grant of substantially the same rights to the JPA to use the Third Party Software as are granted to the JPA with respect to Software in Sections 3.10.1 and 3.10.2.

3.12 OWNERSHIP AND PROTECTION OF CONFIDENTIAL INFORMATION

The following provisions show how Confidential Property should be addressed.

3.12.1 Ownership

The JPA shall retain all right, title and interest, including, without limitation, all Intellectual Property Rights, in the Confidential Information furnished by it to the SI. The SI shall retain all right, title and interest, including, without limitation, all Intellectual Property Rights, in the Confidential Information furnished by it to the JPA.

3.12.2 Confidential Information in Proposal and Development Documents

The SI shall specify what information in its Proposal it considers its Confidential Information. The JPA expects that the designation of Confidential Information will be kept to a minimum and will be limited to pricing. The SI shall also specify what information in the Development Documents it considers its Confidential Information.

3.12.3 Protection

Except as necessary to carry out its obligations under the Contract, each party (a "Recipient") shall not, at any time during or after the term of the Contract disclose the Confidential Information of the other party (a "Disclosing Party") to any person whatsoever, examine or make copies of any reports or other documents, papers, memoranda or extracts embodying the Confidential Information for other use, or utilize for the Disclosing Party's own benefit or for the benefit of any other party any such Confidential Information. Each party shall at all times exercise the same degree of care which it regularly uses to protect its own proprietary information to maintain the confidential, secret or proprietary character of all Confidential Information, provided that each party shall use at least a reasonable degree of care. Notwithstanding the foregoing, either party may disclose Confidential Information of the other party:(i) to its employees and professional advisors to the extent necessary to allow the party to carry out its obligations under the Contract; provided that such persons are advised of the confidential nature of the information and are under an obligation to maintain its confidentiality; and (ii) as may be required by the California Public Records Act. Upon the completion of its obligations to be performed hereunder, the SI shall promptly return to the JPA all JPA Confidential Information.

3.12.4 Exception from Non-Disclosure

The non-disclosure obligations shall not apply to disclosures made by a party in response to any deposition, interrogatory, request for documents, subpoena, civil investigative demand or similar legal process ("legally compelled disclosure") provided that the conditions of Section 3.12.3 are complied with by the disclosing party. In the event that the disclosing party or any of its representatives are requested or become subject to make a legally compelled disclosure of any of the Confidential Information of the other party, the disclosing party shall first provide the other party with prompt prior written notice of such requirement so that the other party may seek a protective order or other appropriate remedy and/or waive compliance with the terms of the Contract.

3.12.5 Personal Information

Personal Information may be subject to special procedures established by the JPA to maintain its confidential nature. The SI shall agree to abide by any such special procedures and to allow the JPA to review its implementation of these special procedures.

3.12.6 Injunctive Relief

The parties shall acknowledge that the unauthorized disclosure or misuse by a party of the Confidential Information of the other party could irreparably damage the other party and/or third parties dealing with the other party, and that monetary damage would not be an adequate remedy for any such breach. In the event of a breach or threatened breach by a party of any of the provisions of the Contract, the non-breaching party shall be entitled to injunctive relief in any court of competent jurisdiction restraining the breaching party from breaching the terms hereof or from disclosing any Confidential Information of the non-breaching party to any person. Nothing contained herein shall be construed as prohibiting any party from pursuing any other remedies available to it, either at law or in equity, for such breach or threatened breach, including specific performance and recovery of monetary damages. In addition, the party breaching or threatening breach shall indemnify the other party for its attorneys' fees and court expenses incurred in enforcing the Contract.

3.13 ESCROW

The Proposal shall provide for the Software Documentation to be escrowed substantially as follows:

3.13.1 Escrow Agreement

Within ninety (90) days after the execution of the Contract, the SI shall enter into an escrow agreement (the “Escrow Agreement”) with the JPA on the terms and conditions provided in this Section 3.13 and such other terms and conditions as are customary and reasonably acceptable to SI and JPA. Pursuant to the terms of the Escrow Agreement, the SI shall deposit with an Escrow Agent located in California and satisfactory to the JPA, without charge to the JPA, the Software Documentation. If the SI revises or supplements any of the System Information deposited, or creates additional Software Information, the SI shall deposit a complete set of such revised, supplemented or additional Software Information with the Escrow Agent within thirty (30) days of such revision, supplementation or creation, and the SI shall indicate with each deposit which documents and which pages have been revised, supplemented or added to the last deposit. The

Escrow Agreement shall continue until there is a Release Event or the Software is no longer in use by the JPA. The SI shall be responsible for the payment of all costs arising in connection with the maintenance of the escrow referred to in this section throughout the entire term of the Escrow Agreement.

3.13.2 Release Events

Release event means that one or more of the following have occurred:

- SI has filed a voluntary petition in bankruptcy or for a reorganization or to effect a plan or other arrangement with its creditors, files an answer to a creditor's petition or other petition against it for an adjudication in bankruptcy or for a reorganization admitting the material allegations thereof, or applied for or permitted the appointment of a receiver, trustee or custodian for any substantial portion of its properties or assets, and such petition or proceeding is not dismissed within sixty (60) days of the filing or initiation thereof;
- SI has ceased its ongoing business operations;
- SI has substantially ceased the sale, licensing, maintenance or other support of the Software;
- SI breaches any material provision of the Contract and fails to cure the breach within fifteen (15) days of notice thereof by the JPA; provided that upon the third material breach of the Contract by SI, SI shall have no opportunity to cure the breach and a Release Event shall be deemed to occur;
- The JPA has exercised its right to maintain or engage a third party to maintain the Software; and
- The end of the initial I-680 Express Lane System support and maintenance term of the SI shall have occurred.

3.13.3 Release

Upon the occurrence of any Release Event, the JPA may direct the release of the Software Documentation from the Escrow and exercise its license rights under Sections 3.10.2, 3.10.3, and 3.10.4.

3.14 INSURANCE REQUIREMENTS AND INDEMNITY

The requiring of any and all insurance as set forth in these specifications, or elsewhere, shall be in addition to and not in any way in substitution for all the other protection provided under the Contract Documents.

No acceptance and/or approval of any insurance by the JPA shall be construed as relieving or excusing the SI, or the surety issuing its Bonds, from any liability or obligation imposed upon either or both of them by the provisions of the Contract documents.

The SI shall at all times during the term of the Contract maintain in full force and effect the policies of insurance required by this Section. At least annually, the SI shall provide to the JPA and the State evidence of the required insurance coverage and, if requested by the JPA, shall provide certified true copies of any and all of the policies of insurance.

The SI shall not commence work under the Contract until all of the insurance required under this Section has been obtained and approved by the JPA and the State, nor shall the SI allow any subcontractor to commence work on its subcontract until the insurance required of the subcontractor(s) has been obtained and approved. Prior to the start of work, the SI shall submit to the ACCMA Contracts Administrator a certificate of insurance indicating that it has obtained the required coverage.

All insurance policies required by this Section, or elsewhere in the Contract Documents, shall be so endorsed as to provide that the insurance carrier will be responsible for giving notice to the JPA and the State in the event of cancellation or material modification of the insurance policy by either the insurance carrier or the SI, at least sixty (60) days prior to any such cancellation or modification.

The SI shall purchase and maintain, during the life of the Contract, the insurance that is described below in Sections 3.14.1 through 3.14.5.

3.14.1 Workers' Compensation

The SI shall maintain Workers' Compensation insurance as required by the laws of the State of California, and shall include Employer's Liability coverage with a minimum limit of $1,000,000.

3.14.2 Comprehensive General Liability Insurance

The SI shall maintain occurrence forms of general liability insurance covering the full scope of the Contract with limits of not less than $1,000,000 per occurrence and $5,000,000 aggregate for personal or bodily injuries, and $5,000,000 per occurrence and aggregate for property damage. A combined single limit per occurrence of $5,000,000 with a combined aggregate of $10,000,000 is acceptable. Such insurance shall include, but shall not be limited to, Comprehensive Broad Form Endorsement covering the following:

a. All premises and operations;
b. Products/completed operations;
c. Independent contractors;
d. Contractual liability covering oral or written contracts or agreements, including the Contract;
e. Additional interests of employees;
f. Extended definition of bodily injury;
g. Personal injury coverage (hazards A, B, and C), with no exclusions for liability assumed contractually or injury sustained by employees of SI; and
h. Broad form property damage.

3.14.3 Comprehensive Business Automobile Liability Insurance

The SI shall maintain comprehensive business automobile liability insurance covering the use of any motor vehicle to be used in conjunction with the Contract, including hired automobiles and non-owned automobiles, providing not less than the following limits:

- $1,000,000 Bodily Injury each person;
- $2,000,000 Bodily Injury each occurrence; and
- $1,000,000 Property Damage each occurrence.

A combined limit of $3,000,000 each occurrence is acceptable.

Loading and unloading of any motor vehicle must be covered by endorsement to the automobile liability policy or policies.

3.14.4 Umbrella Liability Insurance

The limits of liability set forth in sections 3.14.1, 3.14.2 and 3.14.3, may be provided solely by individual policies, or in combination with an umbrella liability insurance policy which provides coverage at least as broad as the individual underlying policies. If an umbrella policy is purchased, each of the policies specified in the above referenced three sections shall be listed as underlying coverage in the umbrella policy.

3.14.5 Other Requirements

In addition to the above requirements, all insurance policies required by this section:

(1) Shall name the JPA, ACCMA, ACTIA, VTA, BATA, and Caltrans, and their respective officers, directors, employees and agents as additional insureds, and evidence of the same shall be provided by proper additional insured endorsements signed by the insurance agent(s) or authorized representative of the insurance company issuing each such policy (not applicable to Worker's Compensation coverage);

(2) Shall contain provisions or endorsements necessary to assure coverage of claims by one insured against another;

(3) Shall contain endorsements providing that the SI's policies shall be primary to all other insurance available to the parties named as additional insureds for liability arising out of or resulting from the SI's operations under the Contract; and

(4) Shall be issued by reputable insurers authorized to issue such policy or policies in the State of California.

3.14.6 Indemnification

The SI shall defend, protect, indemnify and save harmless the JPA, ACCMA, ACTIA, VTA, BATA, and Caltrans and their respective officers, directors, employees and agents, from and against any and all claims, suits, judgments, expenses, actions, damages and costs of every name and description (Claims), to the extent arising out of or resulting from any negligent acts, errors or omissions, recklessness or willful misconduct of the SI.

The SI shall require all architects, engineers and consultants hired as subcontractors for the design of the Express Lane System and facilities, to indemnify and save harmless the SI and the

JPA, ACCMA, ACTIA, VTA, BATA, and Caltrans and their respective officers, directors, employees and agents, from and against any and all Claims, to the extent arising out of or resulting from any negligent acts, errors or omissions, recklessness or willful misconduct related to the performance of the services of the architect, engineer or consultant under the subcontract. Each architect, engineer and consultant shall be required by the SI to carry professional liability insurance in the amount of at least $2,000,000.

3.15 LIQUIDATED DAMAGES

Time is of the essence under the Contract. In the event certain work under the Contract is not satisfactorily completed in a timely manner, the JPA will sustain substantial financial and other damages. Accordingly, the Contract shall provide for liquidated damages in the event of certain delays by the SI, as described below.

3.15.1 Liquidated Damages for Completion Delay

In the event the ETS (including the interface to the Bay Area Toll Authority (BATA) Regional Customer Service Center (RCSC) and the Caltrans Traffic Management Center (TMC)) is not satisfactorily completed and ready for full use and revenue service by the time of the I-680 Express Lane System opening to traffic ("Completion Delay"), the JPA will sustain substantial financial and other damages. The JPA has attempted to estimate the damages which would result from Completion Delay. Given the fact that the Project has a dual role in facilitating transportation and generating revenue, the impact of any such Competition Delay is greater than most public works projects.

Based on the foregoing, in the event of any Completion Delay, **the SI shall pay to the JPA as liquidated damages the amount of $8,400 for each calendar day of Completion Delay**. The parties acknowledge that this amount represents the JPA's reasonable estimate of the damages from Completion Delay, and does not constitute a penalty.

3.15.2 Maintenance Delay

Liquidated damages for maintenance performed during the Warranty Period and the Maintenance option periods shall be assessed for failure of the SI to meet the combined response and repair times specified in Table 1 below.

The repair of any spare component shall not relieve the SI of the responsibility to repair any in-service components that malfunctioned or were malfunctioning while such repairs were being conducted. Such failure to repair the in-service components within the time specified in Table 1 may result in the assessment of liquidated damages. Liquidated damages shall be applied at the rates indicated in Table 1, for each hour or fraction thereof in excess of the repair time shown, until the failure or malfunction is resolved to the satisfaction of the JPA.

Table 1 – Repair/Response Times and Maintenance Liquidated Damages

Equipment/Item	Combined Response and Repair Time (in hours)	Hourly Liquidated Damages ($US)
Tolling Zone Controllers	4	$150
Electronic Toll Collection Reader/Antenna	4	150
Vehicle Detector Loops	4	100
RTMS Equipment	4	100
Mobile Enforcement Readers	4	50
Hand Held Enforcement Devices	4	50
Tolling Zone Beacon	4	50
Local Area Network	4	50
Wide Area Network	4	50
All Supplied Standard Workstations	4	50
TDC Computer System	4	150
Dynamic Pricing Subsystem	4	350

3.15.3 Collection and Effect of Liquidated Damages

At its option, the JPA may deduct any such liquidated damages owed by the SI from amounts otherwise payable to the SI, or may bill the SI as a separate item.

The assessment of liquidated damages by the JPA against the SI does not supersede the right of the JPA to impose other remedies available to it including, but not limited to, retention or withholding of payments otherwise due to the SI until the SI remedies the situation which has led to the imposition of liquidated damages.

In addition to any other remedies available to it in law or under the Contract, in the event that the SI fails to provide the services, equipment, or other items required for performance of the Contract within the prescribed time limits, the JPA may elect to provide or obtain services, equipment, or other items necessary to perform under the Contract. In that event, the SI shall pay the total cost incurred by the JPA for obtaining replacement services, equipment and other items necessary to a fully functional I-680 Express Lane System. The JPA shall have the unilateral right of source selection when the SI is unable to perform. In addition to the replacement costs described above, the SI shall also be required to pay the liquidated damages set forth above for any delay in performance as well as other damages sustained by the JPA.

3.16 INCORPORATION BY REFERENCE

All terms and conditions of the RFP and amendments thereto; all provisions of the Bidder's proposal and submittals in response to the RFP, and amendments thereto; all applicable state and federal laws, statutory and regulatory provisions and orders, are incorporated by reference and made a part of the Contracts to be entered into as a result of this RFP.

3.17 RETENTION OF RECORDS AND AUDITS

The SI shall retain all books, records and documents including, but not limited to, cost or pricing data relating to the Contracts, for a period of at least three (3) years after the date of final payment by the JPA hereunder or any applicable statute of limitations, whichever is longer, and shall make them available for inspection and audit by authorized representatives of the JPA, including the ACCMA Contracts Administrator or his/her designee, at all reasonable times.

The JPA may audit, at any reasonable time during the record retention period, the SI's books and records relating to:

a. Cost or pricing data submitted by the SI; and
b. The determination by the JPA of the SI's costs or estimated costs in connection with any change order or contractual modification, or proposed change order or contractual modification; and
c. Matters involving claims by one party against the other.

The SI shall include these provisions in every subcontract.

3.18 CONTINUITY OF SERVICES

The SI recognizes that the services under the Contract must be continued without interruption and that, upon Contract expiration or termination, a successor, either the JPA or another contractor, may continue them. The SI agrees to exercise its best efforts and cooperation to effect an orderly and efficient transition to a successor.

The SI shall, upon the JPA ED's written notice:

(a) Furnish phase-in, phase-out services for up to 90 days after the Contract expires; and
(b) Negotiate in good faith an agreement and plan with a successor to determine the nature and extent of phase-in, phase-out services required.

The plan shall specify a training program and a date for transferring responsibilities for each division of work described in the plan, and shall be subject to the ED's approval. The SI shall provide sufficient experienced personnel during the phase-in, phase-out period to ensure that the services called for by the Contract are maintained at the required level of proficiency.

The SI shall allow as many personnel as practicable to remain on the job to help the successor maintain the continuity and consistency of the services required by the Contract. The SI also shall disclose necessary personnel records and allow the successor to conduct on site interviews with these employees. If selected employees are agreeable to the change, the SI shall release them at a mutually agreeable date and negotiate transfer of their earned fringe benefits to the successor.

3.19 PROMPT PAYMENT OF SUBCONTRACTORS

The SI is responsible for making timely payments to all subcontractors and suppliers as required by the provisions of Section 7108.5 of the Business and Professions Code.

The Contract shall require the SI to make payment to all subcontractors within 10 days of receiving payment from the JPA.

Each month, the Systems Manager will review the current pay items with the SI and all involved subcontractors to ensure that all work satisfactorily completed within specifications is included in the monthly progress payment. For payment purposes, the same quantity totals used to compute the payment to the SI will be the basis for payment to the subcontractor.

If the subcontractor does not receive payment within the required 10 days, the Subcontractor shall notify the Systems Manager, in writing, of the amount in dispute including the item numbers and payment quantity for each. The Systems Manager shall then notify the JPA ED of the dispute. The ED, or his/her designee, will endeavor to verbally contact the SI within 48 hours to ascertain whether or not a performance dispute exists which necessitates non-payment to the subcontractor. If a performance dispute exists, the SI must demonstrate to the satisfaction of the JPA ED that there is a valid basis to withhold payment from the subcontractor.

If the SI withholds payment from a subcontractor, the SI shall provide to the subcontractor written notice of the withholding of payment. The notice shall detail the reasons for withholding payment as well as the amount. A copy of the notice shall be provided to the surety and the JPA. If no valid dispute exists, the SI will be directed to make immediate payment to the subcontractor. The subcontractor will be responsible for notifying the Systems Manager if this payment is not made. Upon receipt of notification, the JPA ED will schedule a meeting with the SI and subcontractor to verify and discuss the non-payment issue. This meeting will be held at the JPA's offices within 2 working days of the JPA's contact with the subcontractor. If it is determined that the SI has withheld payment to the subcontractor without cause, further progress payments to the SI will be withheld until the subcontractor is paid. In addition, the JPA may order a suspension of work or other administrative actions as it sees fit.

If an action is taken as stated above, the SI shall notify the Systems Manager when payment is made. After the Systems Manager verifies that payment has been made to the subcontractor the JPA shall release withheld progress payments.

Nothing in this Section shall be construed to prevent the subcontractor from pursing a claim with the surety under the SI's payment bond at any time.

4. PROPOSAL REQUIREMENTS

4.1 TECHNICAL PROPOSAL

Presented below are the various requirements that need to be adhered to as Bidders develop their Technical Proposal.

4.1.1 Letter of Transmittal

A letter of transmittal on the Bidder's official letterhead, not to exceed three (3) typed pages in length, shall be included at the front of the Proposal. The letter of transmittal shall be signed in ink by a duly authorized representative of the Bidder.

The letter should briefly introduce the proposed project team. The letter shall provide the name, title, address, phone number, facsimile number and email address of the person designated by the Bidder to serve as a contact during the selection process.

A statement shall be provided that reflects that the Bidder fully comprehends the nature of the tasks involved in the Scope of Work, and accepts full responsibility, if selected for the award of a contract, for the completion of all of the work required, within the proposed schedule.

4.1.2 Qualifications of Bidder

The Bidder shall set forth his understanding of what work is to be accomplished. Specific reference must be made to the project requirements, the specifications applicable to the Express Lane Project, and all other required criteria. The general system requirements should be summarized sufficiently to demonstrate the Bidder's understanding of the products expected. However, a recopying of the project requirements, as described in this RFP, is not necessary or desirable. Special requirements of the project should be discussed and any unique circumstances should be presented.

4.1.2.1.1 General Corporate Description

The Bidder shall provide a general description of the corporate organization, the management structure, and the capabilities of the Bidder itself including each joint venture participant, if any, and of all subcontractors. This shall include, for each firm, an overview of the organization, its history, general business purpose, parent company if appropriate, major divisions or subsidiaries, locations of offices, number of employees, etc.

4.1.2.1.2 Personnel

The Bidder shall identify each firm and the key persons that will be involved in and committed to the planning, design, construction, installation, integration, and implementation of the Express Lane System to be provided under the Contract, including the management of the JPA customer

service center (CSC) staff. Personnel shall be listed by position, education, experience, the role they will play and the percentage of their time that will be devoted to the Contract. Resumes shall be provided with sufficient information to permit the JPA to evaluate each person's ability to contribute to the overall effort. The Bidder shall also identify its proposed Project Manager (PM).

Resumes shall list directly related and general experience of all key personnel who are anticipated to be most responsible for performance of work on the project. All key personnel shall be identified on a proposed organizational chart. Each resume should not be more than two (2) pages in length.

4.1.2.1.3 Project Experience and Ability

The Bidder shall furnish documentation of its own, and its subcontractors', experience in the planning, design, construction, installation, integration, implementation, maintenance and operation of HOT Lane and conventional Electronic Toll Collection (ETC) systems, as well as its experience pertaining to the integration with other ETC back office service center operations. The experience statement shall include the Bidder's past experience and present contracts, and provide details on system hardware and software utilized, facilities management, system operations, system maintenance, customer relations, fiscal management and any other appropriate information related to the development, implementation and operation of the programs.

The descriptions should indicate any significant similarities and differences to those system(s) and the technical services that are described in this RFP. Information must be provided as to whether the contracts were completed on time and within budget or, if the contracts are ongoing, whether the contracts are on schedule and within budget. The Bidder shall also furnish the name, title, address, phone number and email address of persons who may be contacted by the JPA for verification of the information provided. Information for up to seven (7) relevant HOT and tolling system related projects shall be included. Each project description should be no more than 1 page in length.

4.1.2.1.4 Financial Capability

The Bidder, and all subcontractors, shall provide evidence of the firm's financial condition, sufficient in detail to demonstrate its ability to perform all the proposed services. The submission for each firm must include audited financial statements, including all schedules, notes and the opinion of an independent accounting firm, for the three most recently completed fiscal years. The statements must represent the entity submitting the proposal which will be responsible for the performance of all services, not a subsidiary or parent of the Bidder. The Bidder and all subcontractors shall include evidence of their ability to provide the required bonding and insurance. Bidders and all subcontractors may provide interim financial information, with a statement attesting to the accuracy of the information signed by the Chief Financial Officer (CFO) of the firm, if such interim information is necessary to provide all of the information required by the JPA.

4.1.2.1.5 Identification of Proposed Subcontractors

The Bidder shall identify all subcontractors planned to be utilized in all tasks of the Contract, including, engineers, construction firms, consultants, equipment suppliers, computer systems suppliers, software developers or any other firms who will play a significant role in the project. The information furnished shall include a description of the work to be performed by each subcontractor, and the percentage of the total effort that the work represents.

The Bidder shall also provide identification of all Disadvantaged Business Enterprises (DBE) which will be participating in the contract, including an identification of the portion of the work that each will perform, and the percentage of the contract that the work represents. As a condition of receiving federal funds, ACCMA has signed an agreement with Caltrans pursuant to which ACCMA has agreed to implement Caltrans DBE Program Plan (hereinafter referred to as the DBE Program) as it pertains to local agencies. The DBE Program is based on U.S. Department of Transportation (DOT), Title 49, Part 26, Code of Federal Regulations requirements. For work funded using federal funds, the requirements of this program must be met.

The ACCMA has adopted a Small Business Enterprise (SBE) Policy, pursuant to which ACCMA encourages all bidders to utilize qualified SBE subcontractors on ACCMA projects, ACCMA promotes the direct purchase of goods from qualified SBEs by utilizing SBE vendors when such vendors are available and the cot of the goods sought is reasonable, and, for professional services contracts, ACCMA seeks the utilization of qualified SBEs when such SBEs are available. ACCMA's SBE Policy applies to this RFP and the Contract. The SI shall be required to report on SBE usage during the term of the Contract, using a form provided by the ACCMA.

For purposes of ACCMA's SBE Policy, an SBE shall be a "small business" within the meaning of 13 CFR Part 121 and California Government Code Section 14837. In the event that ACCMA's SBE Policy conflicts with any Federal, State or other funding source's programs, policies, regulations or requirements, ACCMA shall make the SBE Policy consistent with said funding source's programs, policies, regulations and requirements to the extent permissible by law. ACCMA's SBE Policy is neutral as to race, ethnicity, national origin, age, sex, religion, sexual orientation and other protected classes.

ACCMA has also adopted a Local Business Enterprise (LBE) Policy, pursuant to which ACCMA encourages all bidders to utilize qualified LBE subcontractors on ACCMA projects. ACCMA promotes the direct purchase of goods from qualified LBEs by utilizing LBE vendors when such vendors are available and the cost of the goods sought is reasonable, and, for professional services contracts, ACCMA seeks the utilization of qualified LBEs when such LBEs are available. ACCMA's LBE Policy applies to this RFP and the Contract. The SI shall be required to report on LBE usage during the term of the Contract, using a form provided by the ACCMA.

4.1.3 Work Plan

4.1.3.1 General Description

A detailed overall description of the proposed ETS, including any drawings, sketches, charts, graphs and written narrative required to illustrate the system design, development, implementation, maintenance and operation, and to support the logic and methodology used by the Bidder to arrive at the proposed design shall be provided. Presented to Bidders, in the appendix to this RFP, is an I-680 Express Lane Concept of Operations document that conveys the JPA's project description and operational requirements.

4.1.3.2 Organizational Chart

An organizational chart for the project showing the PM and key personnel, the firm they work for and their project responsibilities shall be provided. The chart shall be accompanied with explanatory text. The particular advantages of the structure chosen should also be described.

The PM will not be required to reside locally to the project area. However, the key personnel in charge of installation (e.g. Installation Manager) will be required to be on-site during the period of installation and during transition to the warranty period. The Maintenance Manager will also be required to reside locally to the project area during warranty and any subsequent maintenance period options.

4.1.3.3 Management and Work Plan

A proposed management and work plan, including, but not limited to, details for overall and day-to-day project management; management controls and procedures for all tasks of the project; staffing progress reporting, budget tracking, etc. shall be provided by the Bidder. An overview of the various work tasks and how they are to be accomplished, descriptions of the tasks that will be subcontract, and to whom they will be subcontracted shall also be provided in the Work Plan.

4.1.3.4 Accomplishment of Project Requirements

The Bidder shall individually address the requirements of Section 6 - Project Requirements, which sets forth the proposed methodology, techniques and processes to be utilized to accomplish project implementation, warranty and maintenance.

As part of the proposal the Bidder shall provide a requirements trace matrix which demonstrates that each requirement of the RFP has been met by the proposal, including any exceptions or deviations.

In addressing Sections 6.2 through 6.8 of the Project Requirements, a complete listing of the types and quantities of all equipment shall be provided, including all hardware, including computer hardware, and software, specifying for each item the manufacturer, model number, full description and warranty information. Product information that would assist in review and evaluation of the proposal shall be included in the proposal as an appendix.

Proposed Quality Assurance and Quality Control (QA/QC), Reliability, and Testing Programs shall be described in sufficient detail in the Work Plan. The Reliability Program shall include Mean Time Between Failure (MTBF) commitments for the primary system components included in Sections 6.2 Roadside Equipment Requirements and 6.7 Communications Network.

An ETS Project Schedule including all of the milestones that are presented in this RFP shall be included in the work plan. The proposed project schedule shall be one that the Bidder believes to be realistic and attainable. A Critical Path Method (CPM) or similar type chart shall be prepared with supporting text.

A description of the proposed Maintainability Program and Operations Program shall be included in the work plan for maintenance, operations and warranty requirements.

No cost information shall be included in the technical proposal. Inclusion of cost information in the technical proposal may result in disqualification of a proposal from consideration for award.

4.1.4 Technical Alternatives

In response to this section, the Bidder may present a technical description of options that it wishes to present to the JPA for inclusion in, to supplement or to replace elements of its basic proposal. This opportunity is open only if the Bidder has made an acceptable basic proposal that is fully responsive and in compliance with the requirements of the RFP.

If the Bidder elects to propose technical alternatives, the Bidder shall present the proposed alternative approach in response to this section in a clear and concise manner and identify why the alternative is being proposed and why the JPA would benefit from such an alternate solution.

The JPA reserves the right to either accept or reject any and all technical alternatives that are proposed.

4.1.5 Product Information

Product information such as brochures and product specifications that would assist the JPA in review of the Bidder's proposal shall be included in the proposal as an appendix. Extraneous or advertising information that is not helpful in understanding the Bidder's proposal is not desired. The Appendix should preferably be bound in a separate volume and be limited in size.

4.1.6 Bid/Proposal Security

Each Bidder shall enclose with its Technical Proposal the required Bid/Proposal Security in the amount stipulated in Section 2.10 of this RFP.

4.2 COST PROPOSAL

Each Bidder shall submit one (1) original, fifteen (15) copies and one (1) electronic copy (in PDF format on a CD) of the Cost Proposal on the forms provided subsequently in this document. The JPA reserves the right to reject in whole or in part offers containing unbalanced or unreasonable cost proposals for any item(s). The Bidders shall clearly state in their Cost Proposal that the presented program costs are valid for a period for not less than 90 days. The JPA reserves the right to request that Bidders extend their proposed costs for 30-day periods, if necessary.

4.2.1 Project Cost Alternatives

The Bidder may present pricing options that it wishes to present to the JPA for inclusion in, to supplement or to replace pricing elements of its basic proposal. This opportunity is open only if the Bidder has made an acceptable basic pricing proposal that is fully responsive and in compliance with the RFP.

If the Bidder elects to propose pricing alternatives, the Bidder shall present the proposed alternative pricing approach in response to this section in a clear and concise manner and identify why the alternative is being proposed and why the JPA would benefit from such an alternate solution.

The JPA reserves the right to either accept or reject any and all pricing alternatives that are proposed.

5. PROPOSAL REVIEW, EVALUATION AND SELECTION PROCESS

5.1 PROPOSAL EVALUATION AND SELECTION COMMITTEE

All qualifying proposals received by the submission deadline will be evaluated by an Evaluation Committee (Committee) appointed by the Executive Director (ED) of the JPA, or his/her designee. The Committee may seek the advice of others in reviewing the Proposals received, including but not limited to consultants and other advisors. However, the Committee will be solely responsible for evaluating the Proposals received and for rendering a collective final recommendation to the JPA. An important determination during the proposal evaluation effort will be which of the submitted proposals offers the best value to the JPA.

5.2 EVALUATION CRITERIA

The criteria that will be used by the Committee for its evaluation of each qualifying technical proposal are listed below. Factor number 1 is the most important. Factors numbered 2 through 5 are slightly less important, and are approximately equal to each other in value.

1. The qualifications of the Bidder to perform the work required under the contract, including the following factors.

    - The overall management background and experience and the technical competence of the Bidder to plan, design, manufacture, construct, install, integrate and implement a HOT lane system of the type required by this RFP.

    - The qualifications of the principal persons that are proposed to be involved in the planning, design, development, manufacturing, equipping, construction, installation, integration and implementation of the Express Lane System covered by this RFP.

    - The direct experience of the Bidder's management and technical staff in the successful planning, design, development, manufacturing, equipping, construction, installation, integration and implementation of HOT Lane systems.

    - The financial capacity and capability to perform all the work required under the Contract, and the ability to provide the required bonding, insurance and indemnification to the JPA.

    - The perceived ability of the SI and its subcontractors to complete all of the required work in full accordance with the requirements of the RFP and in the time schedule offered in the proposal.

2. The ability of the Express Lane System proposed by the Bidder to perform in accordance with the design objectives specified in this RFP, and to the satisfaction of the JPA.

3. The proposed design of the system, with emphasis on quality, durability, efficiency, safety, appearance, ease and economy of maintenance, suitability for the intended use, and overall conformance with the requirements of the RFP will be taken into account by the Committee.

4. The quality, durability and capability of the equipment, software and systems proposed; the methods proposed to minimize downtime and to maintain satisfactory results over the life of the contract.

5. The overall quality of the Bidder's proposal for the project, including but not limited to the Bidder's comprehension of the JPA's requirements; the completeness, depth and clarity of the information provided; the Bidder's approach to the various aspects of the development and installation of the system; and its commitment to delivery of the project in accordance with the requirements of the RFP.

6. The evaluation of the Bidder's technical proposal may be affected by the Bidder's oral presentation and response to various questions that are posed by the Committee. However, oral presentations may not be required by the Committee in order to make its determinations and recommendations.

Presented below in Figure 1 is a preliminary Technical Proposal evaluation matrix. An evaluation matrix similar to this one will be completed for each Technical Proposal that is received from Bidders.

Figure 1 – Preliminary Technical Proposal Evaluation Matrix

TECHNICAL PROPOSAL		Weight	<Firm #1>		<Firm #2>		<Firm #3>	
			Grade	Product	Grade	Product	Grade	Product
1.a	Overall Qualifications of the Firm to implement the ETS	**5**		0.000		0.000		0.000
1.b	Qualifications of Key Personnel	**10**		0.000		0.000		0.000
1.c	Project Manager's Experience	**15**		0.000		0.000		0.000
1.d	Financial Capability - Satisfy Bonding, Insurance and Indemnification Requirements	**5**		0.000		0.000		0.000
1.e	Ability to Complete the Work on schedule	**5**		0.000		0.000		0.000
2	Conformance with the Design Objectives	**10**		0.000		0.000		0.000
3	Quality, Robustness, and Suitability of Proposed System Design	**20**		0.000		0.000		0.000
4	Features and Procedures to Maximize Reliability of Hardware, Software and Equipment	**10**		0.000		0.000		0.000
5	Overall Quality and Clarity of Proposal	**5**		0.000		0.000		0.000
6	Strength, Clarity, and Soundness for Express Lane Project Implementation	**15**		0.000		0.000		0.000
	TECHNICAL SCORE	**100**		**0.000**		**0.000**		**0.000**

5.3 QUALIFYING PROPOSALS

The ACCMA Contracts Administrator will initially review each Technical Proposal for compliance with the instructions contained in this RFP, any addendum, and with any other procedures required in conducting this procurement. Failure to comply with any requirement may disqualify a Bidder's Proposal from consideration by the Committee. Each Bidder must assume full responsibility for meeting the requirements of the procurement.

5.4 TECHNICAL EVALUATION

After the ACCMA Contracts Administrator selects the qualifying proposals, the Committee will conduct an evaluation of the technical merit of each qualifying proposal. This evaluation will be made on the basis of the evaluation criteria as set forth above in Section 5.2 above. This step of the overall Proposal evaluation may include verification of credentials and stated experience, and the Bidder authorizes the JPA to so inquire as the JPA sees fit.

Proposals which have been found by the Committee to be non-responsive to the technical requirements of the RFP may be considered ineligible for further consideration at and from this point in the evaluation process.

As part of the technical evaluation, the Committee may require those Bidders whose proposals are initially classified as reasonably considered for being selected for award to appear before the Committee to make oral presentations, to answer questions and/or to provide clarification on their proposals. The individual identified as the PM in the Bidder's Proposal will be expected to play the primary role in the Bidder's interview and presentation.

The Committee will also conduct reference checks of Bidders at this time. The purpose of the reference checks will be to determine the level of satisfaction and quality of service provided to Bidder's present and/or past clients in the areas of general system performance; technical integration; compliance with implementation plans and budgets; general responsiveness; customer satisfaction; and contract compliance.

5.5 COST PROPOSAL EVALUATION

Separately, and after completion of the Technical Proposal evaluation, the ACCMA Contracts Administrator will unseal the Cost Proposal of each qualifying Bidder. The Committee shall then perform a thorough evaluation and tabulation of the cost information contained in each Bidder's Cost Proposal.

5.6 COMBINED EVALUATION

The Committee will then rank the Bidders based on the combination of their Technical and Cost Proposals. In determining the final ranking of proposals, technical merit might be given more weight than the proposal cost. The JPA will evaluate proposals and choose the preferred Bidder not necessarily based upon the lowest cost, but based upon the determined best value to the agency.

5.7 BAFO EVALUATION

If the JPA chooses to utilize the BAFO process described in Section 3.5, the Committee will evaluate the received BAFOs from those Bidders that are requested to submit one. The BAFO evaluation will be combined with the basic proposal evaluation as part of the SI selection process.

5.8 RECOMMENDATION FOR AWARD

Following completion of the proposal evaluation process and any discussions or negotiations with the Bidders, the Committee will make a recommendation to the JPA for award of the contract to that responsible Bidder whose proposal is determined to be the most advantageous to the JPA. Award of a contract, if any, is subject to the approval of the JPA ED.

5.9 PRE-AWARD AUDIT

Concurrent with contract negotiations, a pre-award audit of the prospective SI's facility may be performed. If the pre-award audit evaluation is made, it shall be made to determine:

- If the prospective SI's accounting system is capable of accumulating reasonable, allocable, and allowable costs;
- If the prospective SI is financially and professionally capable of performing the work; and
- If the cost proposed is reasonable.

5.10 BID PROTEST POLICY

Presented below is the Bid Protest Policy which shall apply to this RFP.

5.10.1 Definitions

In addition to the definitions described elsewhere in this RFP, for the purpose of this procedure, the following definitions apply:

- "Bid Protest" means a protest filed by a Bidder in accordance with the provisions of this Policy, which protest (i) claims that one or more Bidders should be disqualified or rejected for any reason; (ii) contests a staff recommendation to award the Contract to a particular Bidder; or (iii) contests a staff recommendation to disqualify or reject the Protesting Bidder. Only a Bidder or such Bidder's authorized representative may file a Bid Protest.
- "Protested Bidder" means a Bidder which the Bid Protest claims should be disqualified or rejected.
- "Protesting Bidder" means a Bidder, or such Bidder's authorized representative, who files a Bid Protest in accordance with the provisions of this policy.
- "Working Day" means a regular working day, excluding Saturdays, Sundays and holidays observed by ACCMA.

5.10.2 Notice Procedures

All notices and other communications required or desired to be given under this Policy shall be in writing and shall be deemed duly given: (a) when delivered, if personally delivered to the

recipient; (b) on the first working day following delivery to an overnight delivery service (e.g., FedEx), provided delivery is confirmed by the delivery service; and (c) on the earlier of actual receipt or two (2) working days following deposit in United States registered or certified mail, postage prepaid and return receipt requested, addressed to the parties as set forth below. Additionally, in the case of notices sent by ACCMA, notices shall also be deemed duly given when transmitted by facsimile during normal business hours, provided such facsimile device is capable of generating a written confirmation of such transmission and receipt and an original is deposited in first class mail, postage prepaid, within one (1) working day thereafter addressed as set forth below.

Notices addressed to ACCMA under this Policy must be addressed and delivered to the ACCMA as provided below:

BID PROTEST - Southbound I-680 Express Lane ETS RFP
c/o ACCMA Contracts Administrator
Alameda County Congestion Management Agency
1333 Broadway, Suite 220 Oakland, CA 94612

Notices sent to any Bidder under this Policy shall be sent to the notice or business address and facsimile number set forth in such Bidder's bid package. Any Bidder may change its address for notices by giving written notice to ACCMA in the manner set forth above.

5.10.3 Form of Bid Protest

Any Bid Protest shall be in writing and shall provide the name, address, telephone number, and facsimile number of the Protesting Bidder and shall reference this RFP and the date that responses to such RFP were due at the ACCMA. The Bid Protest shall identify and explain the factual and legal basis for the protest and shall include by attachment to the Bid Protest, any written material that the Protesting Bidder wishes to have considered in connection with the protest. Any Bid Protest that fails to meet these requirements shall not be considered.

5.10.4 Submission of Bid Protest to the CMA

Any Bid Protest must be received by the ACCMA no later than 4:00 PM on the fifth (5th) working day following receipt by the Protesting Bidder of written notice from the ACCMA of staff's preliminary recommendation for award of the Contract. Bid Protests received by the ACCMA after the deadline or which do not otherwise comply with the requirements of this procedure shall not be considered. Bid Protests shall be submitted to the contact and address specified in Section 5.10.2, Notice Procedures, except as may otherwise be stated in the Notice of Intent to Award the Bid.

5.10.5 Investigation by Staff

If a Bid Protest is properly filed, staff will promptly provide a copy thereof to the Protested Bidder. The review committee, as designated by the ED, will thereafter review the facts and circumstances of the protest. Upon request from staff, each Bidder shall promptly provide

additional information necessary for staff to conduct its review of the Bid Protest. Staff may, but shall not be obligated to, hold a meeting or meetings in order to obtain additional information and to seek to resolve the matter. In such event, staff shall give notice to the Protesting Bidder and the Protested Bidder, indicating the time and place of the meeting, which notice may be provided by facsimile. If the Protesting Bidder fails to attend any meeting following not less than three (3) working days notice, the Bid Protest will be deemed withdrawn and shall no longer be considered by the JPA.

5.10.6 Response to Bid Protest

At the conclusion of its evaluation, the review committee review will provide the Protesting Bidder and the Protested Bidder written notice of the staff's recommendation with respect to the Bid Protest, which notice will include a statement of staff's recommendation and a brief explanation. The notice may be given by facsimile. No later than 4:00 P.M. on the third (3rd) working day following the date such notice is received, if either Bidder has an objection to the recommendation, such Bidder shall provide written notice to the ACCMA requesting a hearing on the Bid Protest. If no such notice is received, the recommendation of the staff shall be deemed accepted by the parties, and the recommendation shall be forwarded to the JPA Board for action.

If a request for hearing is received in accordance herewith, the matter shall be referred to a Bid Protest Panel consisting of three persons knowledgeable with respect to matters related to public contracts and bid protests, and at least one person shall not be JPA or ACCMA staff. The JPA ED will select the panel members and act as, or will designate another panel member, as the Chair. The ED will endeavor to pick panelists that do not have, or have not had, financial interest or employment with either the Protesting Bidder or Protested Bidder within the past 5 years. The Chair of the panel shall promptly convene the panel to hear the Bid Protest. Notice shall be given to the Protesting Bidder and the Protested Bidder of the time and place of the hearing.

The Bid Protest and staff's recommendation regarding the Bid Protest shall be submitted to the Panel for consideration at the hearing. The Panel shall allow the parties and staff an opportunity to present additional evidence and argument, limited to facts and legal issues directly related to the Bid Protest, at the hearing. Following the hearing, the Panel shall do one of the following:

1. Accept the recommendation of stall as submitted,
2. Amend the staff recommendation, or
3. Recommend the rejection of all Bids.

The decision of the Panel is final with respect to the disposition of the Bid Protest. The Panel's recommendation will be forwarded to the JPA Board. Thereafter, the JPA Board's role is limited to either awarding the contract as recommended by the Panel or rejecting all Bids.

6. PROJECT REQUIREMENTS

6.1 GENERAL REQUIREMENTS

Presented in the Appendix of this RFP is a copy of the ETS System Requirements document. If there are any differences between the requirements presented in this RFP and the System Requirements document, the RFP shall govern.

6.1.1 Life, Reliability, and Availability

The ETS, with appropriate maintenance, shall be sized and designed for a minimum ten-year usable life.
Each major part of the ETS shall meet or exceed the specific Mean-Time-Between-Failure (MTBF) and Mean-Time-To-Repair (MTTR) criteria that are listed below in Table 2.

Table 2 – Equipment MTBF and MTTR

Equipment	Minimum Mean Time Between Failures	Maximum Mean Time To Repair
Tolling Zone Controllers	12,000 hours	2 hours
ETC Reader/Antenna	20,000 hours	2 hours
Vehicle Detector Loops	10,000 hours	2 hours
RTMS Equipment	20,000 hours	2 hours
Mobile Enforcement Readers	15,000 hours	2 hours
Hand Held Enforcement Devices	15,000 hours	2 hours
Tolling Zone Beacon	15,000 hours	2 hours
Local Area Network	20,000 hours	2 hours
Wide Area Network	20,000 hours	2 hours
All Supplied Standard Workstations	10,000 hours	2 hours
TDC Computer System	10,000 hours	2 hours
Dynamic Pricing Subsystem	10,000 hours	2 hours

MTTR is based on average repair times for typical system failures.

6.1.2 Hardware Requirements

System Life- The system design shall ensure a ten (10) year minimum system life. Equipment shall be designed, fabricated, and tested to ensure that it operates satisfactorily without material degradation for a minimum of ten years. Expendable and consumable materials and supplies will not be included in this requirement.

New Equipment- All equipment, supplies, and materials for this system shall be new and unused, when installed. Materials and products which have been previously used for development work, leased systems, or any other type of used equipment, will not be permitted.

Modular Design- Modular design principles shall be used throughout the system, and shall be defined as the packaging of components together in replaceable units according to the function they perform and by using standardized hardware and components to achieve flexibility of use and to facilitate maintenance. Replaceable and repairable modules shall be used whenever possible to simplify troubleshooting, reduce downtime, and reduce operational and maintenance costs.

Accessibility- All assemblies, subassemblies, and modules shall be readily accessible for removal, testing or replacement without extensive removal of other modules or assemblies. Components shall be located so that there is visibility and access for the use of hand tools and standard test probes where maintenance is required.

Circuit Protection- Components and devices which are susceptible to damage upon failure of the regulating element within a power supply shall be protected by means of an over-voltage protective circuit. All fuses shall be mounted with retention devices at both ends. All fuse types shall contain visual indicators to indicate a blown fuse. The SI's design and recommendations shall conform to the applicable lightning protection, surge, and transient protection standards, such as NFPA-78, IEEE Std 587, and UL-1447, as they apply to each area of protection.

Housings and Cabinets- The material and finish for new housings and cabinets shall be environmentally resistant to outdoor highway environments with wide temperature fluctuations. A minimum of ten (10) years service without additional painting or repairs is required. All cabinets and housings shall be fitted with required gaskets, grommets, and filters to prevent dust, dirt, smoke, moisture or other contaminants from entering the enclosures in accordance with the application in which the equipment is employed.

Hardware- All mounting hardware, bolts, nuts, studs, washers, brackets, screws, hinges, and others shall be new and shall be constructed of non-corrosive material, and of a design to perform their respective functions for the specified ten (10) year system life.

Fabrication- All chassis, attachments, and hardware shall be fabricated from corrosion and rust resistant materials, or properly plated to achieve corrosion and rust resistance. For those housings and cabinets requiring locked covers, there shall be no exposed hardware visible or accessible from the outside. The covers shall fit flush with the main body of the housing with no exposed gaskets or seals visible when the cover is closed.

Stainless Steel Materials- The provision and fabrication of all stainless steel materials used in the system shall conform to current American Society for Testing and Materials (ASTM) requirements. All welds shall be thoroughly cleaned to remove all oxide scale. Discoloration resulting from the welding process shall be removed from all external surfaces. All grinding, polishing and buffing shall be in accordance with the requirements of the material used.

Equipment Diagnostic and Self-Test Requirements- Diagnostic firmware shall be embedded in the Tolling Zone Controller (TZC) and it shall be interactive with operation and to self-test at the time the equipment is powered on and/or throughout its operation. Diagnostics shall operate automatically to detect malfunctions and failures and to report such failures to the Maintenance On-Line Management System (MOMS) system at the time of occurrence. Diagnostic software shall be provided to evaluate all aspects of the TZC operation, including communications.

The system operation shall not be adversely affected by the presence of transponders issued by other facilities or organizations (whether or not they are from the same manufacturer).

The SI shall conduct an inter-modulation study at each roadside site prior to installation to ascertain that the ETS subsystem will not interfere with existing Caltrans radio equipment or other nearby sources of Radio Frequency (RF), and vice-versa. Should any such interference be identified, the SI shall take any required actions to protect the affected equipment or source to the complete satisfaction of the JPA at no additional cost to the Contract.

Caltrans is fully responsible for operations and maintenance of the State Highway System (SHS), including projects such as the I-680 Express Lane upon completion of construction. Caltrans is also responsible for providing for the authorized expansion of the system and for assessing the impact of improvements proposed by others to the existing system.

To ensure that projects on the SHS are well designed, safe, and properly constructed, all project planning, design, and construction should be performed in accordance with Caltrans standards and practices and according to the Caltrans project development process.

For this reason, the installation of hardware and conductor within the State's Right of Way requires the JPA to secure an Encroachment Permit based upon the Final System Design and to then secure a Rider authorizing the SI or its subcontractors to perform the installation. The SI is expected to assist the JPA in securing the Encroachment Permit and Rider by adhering to the requirements set forth in the Caltrans Encroachment Permit Manual, which is available online at:

http://www.dot.ca.gov/manuals.htm

The nature of the ETS is such that it will be considered a Locally Funded Project in excess of $1,000,000 within the State's Right of Way for purposes of the Manual. The Cooperative Agreement, the Project Report and the Environmental Clearance have been or will be completed by the JPA. The SI is expected to develop the necessary documents to satisfy the Encroachment Permit Application Submittal Requirements and assist with the actual submittal to Caltrans.

Working drawings, catalog information, or shop plans for all equipment in the system and all work to be permanently installed shall be submitted for approval in accordance with the State of California Department of Transportation Standard Specifications July 1999 and Standard Plans July 2004. The SI shall also be responsible to adhere to all other jurisdictional requirements.

6.1.3 Applicable Codes and Contractor Requirements

All work for the Contract shall be in conformity with the current requirements of the following:

- State of California Department of Transportation Standard Specifications July 1999;
- National Electric Code;
- National Electrical Contractors Association (NECA);
- Occupational Safety and Health Act (OSHA);
- National Fire Protection Association (NFPA);
- National Electrical Manufacturers Association (NEMA);
- Institute of Electrical and Electronic Engineers (IEEE);
- Applicable Electronic Industries Association (EIA) Standards for Interface and Intercommunication; and
- Underwriters Laboratories (UL).

The SI shall ensure that each subcontractor performing construction or installation work under the Contract holds all necessary California contractor's or other licenses. Additionally, the SI shall ensure that each subcontractor performing such work complies with wage requirements applicable to public works contracts under California and federal law, including but not limited to the provisions of California Labor Code Sections 1774 and 1775. If there is a difference between the minimum wage rates predetermined by the United States Secretary of Labor and the general prevailing wage rates determined by the Director of the California Department of Industrial Relations for similar classifications of labor, the subcontractors shall pay not less than the higher wage rate. Prevailing wage rates determined by the Director of Industrial Relations under California law are available online at http://www.dir.ca.gov/DLSR/PWD. Federal minimum wage rates are available online at http://www.gpo.gov/davisbacon.

6.1.4 Environmental Requirements

The ETS equipment shall be installed either outside or in a building. The assembled equipment shall be rated to perform under those environmental conditions at the three tolling zone sites.
The SI shall thoroughly investigate all environmental factors that may affect the operation, reliability, and life of the system to be provided under the Contract and shall select equipment that is appropriate for operation in the environment or shall take adequate steps to protect the equipment from the environment.
For each environmental area the equipment installed or operated in that area the SI shall provide certified test results from a testing laboratory satisfactory to the JPA demonstrating that the equipment meets the environmental specifications as indicated below in Table 3.

Table 3 – Summary of Environmental Requirements

Area	Exterior	Building
Min operating temp	-20°F	50°F

Max operating temp	145°F	85°F
Min operating humidity	15%	15%
Max operating humidity	98%	80%
Shock	98% MIL-STD-810E Method 516.4 procedures IV	MIL-STD-810E Method 516.4 procedures IV
Vibration	±1g from 15Hz through 500 Hz for a period of 15 minutes in three planes.	None
Corrosion	IEC 68-2-11 or NEMA 4X enclosed	None
Electrostatic Discharge	Survives while booth testing	None
Rain	MIL-STD-810E Blowing rain method 506.3 procedure I or NEMA 4X enclosed	None
Dust	IEC-529/MIL STD-810 Sand and dust size smaller or equivalent to coal or salt or NEMA 4X enclosed	None

Certified results from prior testing by the manufacturer or an approved independent test lab may be used to satisfy the environmental qualification requirement.

6.2 ROADSIDE EQUIPMENT REQUIREMENTS

6.2.1 FasTrak® ETC Subsystem

The ETC subsystem, including the reader and antenna, deployed for the I-680 Express Lane System shall meet all California Title 21 requirements of the toll system operational requirement standards that are in place in the Bay Area at time of deployment of the I-680 Express Lane System.

I-680 Express Lane patrons will be issued FasTrak® transponders through the BATA RCSC, which is located in San Francisco. However, in the event that transponders are procured under the Contract they shall be provided in accordance with all California Title 21 requirements utilizing a protocol for high-speed tolling. Additional transponders shall be identical in design and function to the FasTrak® transponder per the following:

- Shall be user installable/removable;

- Provide audible tone when the transponder is successfully read; and
- Provided with an RF shielding bag which would be utilized when the vehicle is traveling as an HOV.

The SI shall be responsible to obtain a radio frequency (RF) user license from the Federal Communications Commission (FCC) on behalf of the JPA, which will be the operating agency.

6.2.2 Tolling Zone Controllers

The TZCs shall control and monitor the toll collection activities at each tolling zone and be primarily responsible for gathering FasTrak® transaction data and transmitting that information to the Toll Data Center (TDC), in a secure environment, and without duplication, for trip compilation. The lane controller shall also interface with the TDC to receive daily FasTrak® tag account status files on, at least, a daily basis.

6.2.2.1 Toll Zone Controller Primary Functions

The primary functions of the TZC shall be to:

- Create and transmit vehicle count and transponder read data;
- Provide visual feedback of possible violations, through the use of an enforcement beacon installed at the tolling zone in such a position that it can be easily viewed by CHP officers;
- Monitor its peripheral tolling zone equipment (i.e. FasTrak® reader, antenna, vehicle detection system equipment, etc) and report on the status of these pieces of equipment; and
- Receive daily transponder account status update files from the TDC.

The TZC shall accommodate a system administration and maintenance interface. This interface shall be used by operations and maintenance personnel to accomplish tasks such as modifying system configuration files, extracting transaction data, performing preventive maintenance tasks, etc.

The TZC shall be capable of storing no less than 30 days of vehicle, event and FasTrak® transaction data. The TZCs shall also store no less than 10 million FasTrak® transponder account status entries.

All TZC messages (i.e. vehicle, event, FasTrak® transaction, maintenance, etc.) shall contain a unique sequence number.

The TZCs shall include at least the following information in the transaction record:

- Transponder number;
- Transponder status;
- FasTrak® transaction date;
- FasTrak® transaction time;
- Transponder handshake count;

- Lane controller date;
- Lane controller time;
- All pertinent VDS data; and
- Equipment states.

The TZC's vehicle sequencing logic shall be self-correcting. The TZC shall record all transponders that are read by the FasTrak® tolling zone subsystem.

The TZC shall be able to operate normally without network communications, storing current records for later transmission to the TDC.

6.2.2.1.1 Equipment Monitoring and Control

The TZCs shall monitor the following peripheral equipment through real-time data connections:

- Vehicle detection system equipment;
- FasTrak® transponder reader;
- FasTrak® antennas;
- Enforcement beacon; and
- All other power supply and communications equipment that is located at the tolling zone.

The system monitoring functionality shall include the ability to receive maintenance status messages from all subsystems and it shall incorporate logical processes, local to the toll zone controller, which evaluate operations and create maintenance alerts based upon sets of rules and expected conditions.

The maintenance alerts that are generated by the toll zone controller shall be sent to MOMS.

MOMS shall be responsible for compiling the raw maintenance data into a database and creating maintenance alerts and work orders that define actual maintenance events that need to be addressed.

6.2.2.1.2 Lane Controller Data and File Transmission

The TZCs shall be connected to the TDC through an Ethernet connection and transmit files to the TDC server in real-time.

The TZCs shall transmit vehicle detection information, FasTrak® transaction data, equipment diagnostics and maintenance data.

The TZCs shall receive, at a minimum, daily FasTrak® tag account status update files, system configuration files, and toll rate files.

The TZC serial ports shall be configurable as either RS-232 or RS-422.

Serial communications interfaces shall provide for error detection protocols.

6.2.2.2 Lane Controller Equipment Requirements

Under normal conditions, the TZC shall operate in an automated fashion without intervention from operational personnel.

All ETS functions, including but not limited to, transaction assembly, file transmission, and toll rate assignment shall be designed to function independent of human interaction.

The TZCs shall be environmentally hardened and housed in an environmentally shielded and controlled enclosure to operate under the weather conditions found in the Bay Area.

The TZCs shall be designed with discrete input and output signal lines and use optical isolation circuitry for protection.

The TZCs shall store data redundantly.

The TZCs shall provide for a local user interface for maintenance purposes.

The TZC data storage process shall be based on First in First out (FIFO) technology.

The TZC performance shall be ample to handle all lane processes as designed at a rate of 2,500 vehicles per lane per hour, with 50% of those vehicles having transponders.

For any 10 second period, the TZC shall be capable of handling all Express Lane processes for transponder vehicle passage rates of 7,200 vehicles per lane per hour, assuming that all vehicles have transponders.

The TZCs shall capture transponder reads for 99.98% of the vehicles with properly mounted transponders passing through the tolling zone.

The TZCs shall capture transponder reads for less than 0.01% of the transponders traveling in the General Purpose (GP) lane closest to the Express Lane (left-most GP lane).

The TZCs shall be capable of determining the direction of travel for all vehicles in the Express Lane with an error rate in the determination of travel direction of no more than 0.01%.

6.2.2.3 Lane Controller Operating System

The TZC Operating System (OS) shall be robust enough to support all of the operations of the tolling zone subsystems while meeting all of the requirements stated in the RFP.

The OS of the toll zone controller shall function in such a way that it allows for the real-time collection and transmission of data across an Ethernet network as well as remote, real-time user connections (for maintenance purposes).

The TZCs shall provide TCP/IP network support and TCP utilities such as telnet, ping, and FTP.

6.2.2.4 Lane Controller Interface to the Toll Data Center

Each TZC shall maintain a real-time interface with the TDC. This interface shall allow for the transmission and reception, in real-time, of any data collected and assembled in the lane and any data compiled at the TDC which is necessary for tolling zone subsystem operations.

The TZC to TDC interface shall be fully automated and not require human intervention.

The TZC shall broadcast lane events in near real-time to the TDC to support the monitoring activities carried out by operations or maintenance personnel.

The TZCs shall transmit a periodic heartbeat, or status, message to the TDC for maintenance purposes.

If communication between the toll zone controller and the TDC fails, the TZC shall periodically and automatically attempt to re-establish the connection until the connection is made.

The TZCs shall periodically (at least daily) receive tag status files from the TDC. The TDC shall receive the tag status files from the BATA RCSC. Upon receiving tag status files from the TDC, the TZC software shall subject the file to various sanity checks to ensure that the file is valid prior to downloading the new data file into its static memory. Typical sanity checks would include checking the file type, the file size, the file header and footer data, etc.

The TZCs shall transmit an indicator of TDC-initiated command execution, for example transmission is successful, it has failed, etc.

6.2.2.5 Lane Controller Equipment Interface

All TZC interfaces to peripheral equipment shall incorporate means of detecting whether the equipment is operating properly or if it experiences malfunction.

6.2.2.5.1 Lane Controller Interface to the Vehicle Detection Systems

The interface between the TZCs and the Vehicle Detection System (VDS) equipment, at those locations in which this communications link is established, shall be in real-time.

The VDS data that is gathered shall consist of vehicle speed and traffic volume data (from the Express Lane) and travel time information from the GP lanes. The necessity of the accurate and timely exchange of data between the two systems is essential to successful dynamic pricing operations.

6.2.2.5.2 Lane Controller Interface to the FasTrak® Reader

The interface between the TZCs and the FasTrak® transponder reader shall be in real-time and not be encumbered by latency.

The bidirectional interface shall allow for the exchange of toll zone controller commands and FasTrak® system transponder data. The necessity of the accurate and timely exchange of data between the two systems is essential to successful ETS operations.

6.2.2.5.3 Lane Controller Interface to the Enforcement Beacon

The toll zone controller shall interface with the tolling zone enforcement beacon in real-time and immediately send the proper commands to the beacon when a valid FasTrak® transponder is detected and processed.

6.2.2.5.4 Uninterruptible Power Supply

The TZCs shall interface directly to Uninterruptible Power Supply (UPS) to ensure that battery power back-up is available to the controller if commercial power fails.

The use of UPS equipment shall also ensure that the TZC software is shut down in an orderly fashion if commercial power is not restored prior to the UPS battery power running out.

6.2.3 Vehicle Detection System Equipment

The primary functions of Express Lane VDS equipment shall be to accurately, and in near real-time, detect vehicles in the Express Lane to determine the traffic density and the speed of vehicles that are traveling in that lane.

6.2.3.1 Inductive Vehicle Detector Loops

Vehicle detection loops shall be installed in the southbound Express Lane at the locations identified in the Project Electrical Plans, a copy of which is provided in Appendix of this RFP. Installation of the loops shall be in accordance with all relevant Caltrans specifications.

Vehicle detection loops shall be of the inductive loop type with the ability to detect vehicles traveling at speeds ranging between 5 and 100 mph.

As is described in the I-680 Express Lane Communications Plan, a copy of which is presented in the Appendix to this RFP, the detection loops shall communicate directly with and provide real-time data to the TDC and, ultimately, to the dynamic pricing module/software for rate setting processing.

6.2.3.2 Remote Traffic Microwave Sensors

In order to collect travel time data from the GP lanes, Remote Traffic Microwave Sensor (RTMS) devices shall be installed along the outside GP lane. RTMSs shall be located per the Electrical Plans that are provided in the Appendix. Installation of the RTMS shall be in accordance with all relevant Caltrans specifications.

The RTMSs shall be capable of detecting vehicles from a "side-fire" type installation.

The RTMSs shall be capable of detecting vehicle volume, count and speed across all GP lanes and in the Express Lane at vehicle speeds between 5 and 100 mph. The RTMS units shall also determine in which lane the vehicles are traveling.

The RTMSs shall be configured to capture vehicles in the Express Lane in the event that a loop failure occurs thus allowing the RTMS units to be used as data back-up to the failed vehicle detector loop.

6.2.4 Dynamic Message Signs

6.2.4.1 Primary DMS Functions

The Dynamic Message Signs (DMS) shall be located approximately ½-mile upstream from each entry point to the southbound I-680 Express Lane and shall be the primary method of informing the public of what the toll rate will be if Single Occupant Vehicle (SOV) operators choose to use the Express Lane.

When the TDC trip processor calculates a toll rate for an entry point, the rate shall be communicated to the DMS controller utilizing the IP address for that DMS controller.

The DMS controller shall send the display message to the Light Emitting Diode (LED) panel, which will be mounted to the DMS.

The LED panel shall continuously interrogate itself and report back to the sign controller that the requested message is being properly displayed. The DMS controller shall then relay this information back to the trip processor software, which will be located at the TDC.

In addition to reporting what is being displayed on the DMS at the time of the rate change, the DMS shall be polled by the TDC at regular intervals (at least every 30 seconds) and shall in turn poll the LED panel and return the message being displayed for confirmation that the correct rate is being displayed.

6.2.4.2 DMS Equipment Requirements

The DMS shall be consistent with the Caltrans approved signage program.

The DMS shall include both static and dynamic portions.

The Express Lane DMS shall combine static sign information panels with dynamic LED panels.

The static portion of the DMS shall include displayed information that never changes (the Express Lane downstream exit points, restricted hours, FasTrak® logo, etc.).

The dynamic portion of the DMS shall include an LED panel attached to the sign that shall display the dynamically changing toll rates. This panel shall consist of at least 6 characters (alpha numeric) that are at least 12 inches in height.

The panel shall include an automatic feature that measures the ambient light and adjusts the intensity of the LEDs to be visible under all light conditions (full sun to full dark). In order to minimize the "halo" effect of certain colors, the LED color shall be amber.

The LED panel shall also include the ability for the sign to report to the TDC what is being displayed by interrogating the sign pixels.

The DMS shall be managed by a sign controller which will be located either in a weather hardened roadside enclosure or on the mounted sign.

The DMS controller shall communicate to the TDC's trip processor via a communications network utilizing the National Transportation Communications for ITS Protocol (NTCIP) standard sets or, if allowed by JPA, Transmission Control Protocol/Internet Protocol (TCP/IP).

The DMS controller shall have a unique IP address that identifies its location.

6.2.5 Closed Circuit TV Subsystems

Closed Circuit Television (CCTV) camera systems shall be deployed at each of the three (3) tolling zones for traffic condition surveillance, monitoring of the tolling zones and for safety reasons. CCTV cameras shall also be used to assist Caltrans staff in detecting incidents and to track the progress of incident response and vehicle clearance. Video from the CCTV cameras shall be sent to the TDC and TMC where it shall be made available to third parties over the Internet.
During normal operational periods JPA staff shall have control over the pan, tilt and zoom camera features and Caltrans staff shall have only view access. During emergency situations, control of the video shall be provided to TMC staff.

6.2.5.1 CCTV Camera Locations

The CCTV cameras shall be installed at locations according to the Installation Plans.

6.2.5.2 CCTV Subsystem Requirements

The CCTV subsystems shall include the following components:

- CCTV camera;
- Camera mounting pole;

- Pole foundation;
- CCTV control cabinet; and
- Video and communication components and cables.

CCTV cameras shall be able to turn 360 degrees and contain pan, tilt and zoom capabilities. The CCTV subsystem shall use Ethernet-based communications and protocols.

6.2.5.3 Camera Assembly

Each camera assembly shall consist of the following fully integrated components:

- Solid state color camera;
- Zoom lens;
- Weatherproof camera housing;
- Pan and Tilt; and
- Camera mounting assembly.

The camera assemblies shall be assembled and tested in accordance with these specifications prior to delivery to the JPA. Factory testing documentation shall be furnished to the JPA. Camera assemblies shall be furnished as a complete unit.
Individual components of the camera assembly shall conform to the specifications in the following sections.

6.2.5.4 Solid State Color Camera

Solid state Charged-Coupled Device (CCD) color cameras shall be provided, which shall meet or exceed the following requirements:

Table 4 – Solid State Color Camera Requirements

Color System	Phase Alteration Line (PAL) standard
Image Sensor	1/3” interline transfer, progressive scan CCD
Horizontal Resolution	Minimum 470 horizontal television lines
Sensitivity	3.0 lux @ 1/60 second (color day) 0.2 lux @ ¼ second (color day) 0.3 lux @ 1/60 second (mono night) 0.02 lux @ ¼ second (mono night)
Day/Night Switchover	Day (color) / night (mono), manual or auto
On-screen ID	Presets, Sectors and two alarms programmable (enable/disable)
Title Generation	8 lines

The camera shall be specifically designed to operate under low light conditions and shall function satisfactorily over a wide range of dynamic lighting conditions ranging from low light

to full sunlight. To improve sensitivity under low light conditions, the camera may switch from full color to monochrome operation.

6.2.5.5 Zoom Lens

The camera lens shall be a motorized zoom lens meeting the following requirements:

Table 5 – Camera Lens Requirements

Optical Zoom Range	Integral 23X optical (3.6 to 82.8 mm)
Digital Zoom range	1X through 10X digital
Auto focus	Selectable Auto/Manual

6.2.5.6 Waterproof Camera Enclosure

The cameras shall be furnished in waterproof enclosures. The enclosures shall be designed to ensure that the complete CCTV camera assembly operates satisfactorily and in compliance with the specifications in the meteorological and ambient conditions prevailing in the San Francisco Bay Area in general and the East Bay in particular.

The enclosure shall be weatherproofed and sealed. The enclosure shall protect against water, grime, dirt, sand and moisture.

The enclosure shall include an integral sunshield to reduce internal temperatures and minimize glare caused by direct sunlight.

6.2.5.7 Pan and Tilt

The camera assembly shall include remote controlled pan and tilt functions that, at a minimum, meet the following minimum requirements:

Table 6 – Camera Assembly Requirements

Pan	360 degrees continuous pan
Tilt	0 – 90 degrees down, Auto flip at 90 degrees
Presets	64
Preset speed	> 250 ° / second preset, at 0.1 ° accuracy
Tours	8, each of 32 presets with dwell time per preset per tour
Sectors	16
Privacy Zones	8 programmable zones can be set for video blanking
Digital position feedback	Yes

6.2.5.8 Camera Mounting Assembly

The cameras shall be installed on poles. The SI shall supply and install all necessary fixtures and fittings for mounting the camera assembly onto the poles and building rooftops. The camera mounting bracket shall be capable of supporting the weight of the camera assembly and shall be capable of withstanding winds with no appreciable movement for speeds up to the maximum design wind velocity as experienced in the San Francisco Bay Area in general and the East Bay in particular.

6.2.5.9 Pole Mounting Brackets

For pole mounted cameras, CCTV camera assemblies shall be provided with camera mounting assemblies, to mount cameras on CCTV poles.

6.2.5.10 Mounting Bracket Design

The SI shall be responsible for the design and construction of the mounting brackets and for conducting a field survey to determine the most suitable method of mounting the cameras. Shop drawings of the mounting method shall be submitted to the JPA for approval prior to manufacture of the camera mounting brackets.

6.2.5.11 Camera Cable

The SI shall furnish and install all necessary cables and connectors between the camera assembly and the outstation cabinet. Pole mounted camera cables shall be routed down the inside of the pole and through underground duct to the outstation cabinet.

6.2.5.12 Camera Control Receiver (CCR)

The SI shall furnish and install digital camera control receivers in outstation cabinets at each camera location. The control receivers shall respond to signals from the central camera control system and provide D/A conversion of camera control function commands. Output voltages from the CCR shall be as required by the camera assembly provided.

6.2.5.13 CCR Requirements

The CCR units shall transmit and receive bi-directional control signals to and from the TDC and the Caltrans TMC over the communications network, as specified in Section 6 above. The control receiver shall provide the drive signals to the camera, lens, and the pan and tilt functions, and transmit status information over the communications network to the TDC and the TMC for processing.

The SI shall furnish and install all necessary cables and connections between the CCR and the communications network.

The CCRs shall be fully compatible with the camera control software and the camera assemblies provided. At a minimum, the CCRs shall provide the following functions:

- Zoom in;
- Zoom out;
- Pan left;
- Pan right;
- Tilt up;
- Tilt down;
- Focus near;
- Focus far;
- Camera power on;
- Camera power off;
- Iris override;
- Iris open (manual/automatic); and
- Iris close.

Each CCR shall provide a means for the local control of the above functions. The control panel shall also include a main power switch, fuse and breaker, as well as "off" settings from zoom, focus, pan, tilt, and iris. The CCR shall provide video testing capabilities, to allow observation of the video signal from the camera in the field.

The CCR shall have eight (minimum) form "C" relays to activate auxiliary devices in the field. The CCR shall have eight (minimum) status inputs available to monitor conditions in the field, such as cabinet entry, loss of camera enclosure pressure, etc.

6.2.5.14 CCTV Cabinets

The CCTV cabinets may be used to house the CCR and other necessary equipment required for CCTV camera operations and maintenance, provided that it is located near enough to the CCTV camera and adequate space is available within the cabinet to facilitate maintenance operations.

If the SI determines that a separate cabinet is required to house the CCR, all costs associated with the cabinet shall be included in the cost of the CCTV subsystem. The location of any CCTV cabinets, if any, shall be subject to the approval of the JPA.

6.2.5.15 CCTV Communications Equipment

The SI shall furnish and install fiber-optic modems, cables and connectors, as necessary to provide transmission of the camera video signal from the outstation cabinet to the TDC and the Caltrans TMC and to provide two-way transmission of digital camera control signals and camera feedback data.

Video transmission shall meet all State and local standards. Control data shall utilize RS-422 serial interface and standard video industry control protocols.

CCTV communications equipment shall be provided in accordance with Section 6 of the RFP.

6.3 ENFORCEMENT EQUIPMENT REQUIREMENTS

In order to manage the traffic in the Express Lane using dynamic pricing, careful and efficient system enforcement is essential. Uncontrolled use of the Express Lane by unauthorized vehicles will cause overcrowding, disrupt the dynamic pricing process and jeopardize the success of the pilot project.

The I-680 Express Lane enforcement process will always include some type of visual monitoring to determine how many occupants are in the vehicles that are traveling in the Express Lane. Visual enforcement is performed by California Highway Patrol (CHP) officers observing driver behavior entering and exiting the Express Lane and determining if a transponder is visible on the windshield. Access to the Express Lane will be controlled through the use of triple painted lines (one white line and double yellow lines). Primary emphasis for enforcement will be reducing or attempting to eliminate the number of SOVs that use the Express Lane without a valid transponder and minimizing occurrences of vehicles crossing the double lines. However, it is presumed that all other typical traffic violations will also be enforced by the CHP in the southbound I-680 Express Lane corridor, including speeding, seat belt violations, etc.

Enforcement areas will be installed to assist CHP officers in the I-680 Express Lane enforcement process. A minimum of two 400-meter long by 4.8 meters wide enforcement zones will be deployed between approximate Stations 75+00 and 96+40 and between 24+00 and 58+40. Two other enforcement locations, one north of the Jacklin interchange and one north of the Mission 262 interchange, will provide 4.9 meter wide inside shoulders that will be approximately 400 meters in length. These inside shoulder areas are available to CHP officers to conduct enforcement of the Express Lane.

6.3.1 I-680 Express Lane System Enforcement Tools

The CHP will make use of the following four (4) enforcement tools, which will be provided to them and be maintained by the SI pursuant to the Contract:

- Mobile Enforcement Readers (MERs);
- Personal Digital Assistant (PDA) units;
- Hand Held Devices; and
- Tolling Zone Beacons.

6.3.1.1 Mobile Enforcement Reader (MER)

The MER shall be comprised of a FasTrak® antenna that is mounted on CHP cars allowing an officer to determine whether passing vehicles are equipped with a transponder that is in good standing.

The CHP officers can either park on the shoulder of the road or be traveling along the corridor and query whether passing vehicles are equipped with a valid transponder by touching the screen of a PDA device which triggers an RF read signal burst in the direction in which the antenna is faced.

The MER antenna shall then attempt to detect a FasTrak® on-board device and, if it does detect a tag, compares the antenna ID number against the tag status file that is resident on the MER to determine whether or not the transponder is linked to a good FasTrak® account.

MERs shall permit Express Lane enforcement activities by CHP officers while traveling at highway speeds.

MERs shall allow CHP enforcement officers to confirm that an SOV is equipped with a transponder that is linked to an account that is in good standing.

6.3.1.1.1 MER Primary Functions

The MER shall provide the following functions:

- The MER shall be able to read a transponder and determine whether it is in good standing.
- The MER shall be able to read on-board transponders, at highway speeds, at distances of up to 75 feet.
- The MER shall operate in compliance with the Title-21 FasTrak® Dedicated Short Range Communications (DSRC) specifications, protocol and operating parameters.
- The MER shall detect on-board transponders within the operating requirements that are used by the FasTrak® readers and antennas that are installed at the Express Lane tolling zones.

6.3.1.1.2 MER Equipment Requirements

The MER shall be weather proof, hardened for use outside and suitable for use by CHP enforcement cars. The MER antennas shall be installed on CHP vehicles in such a manner that they do not interfere with any currently operating police equipment and/or functions.

The PDA display screen shall be visible under all lighting conditions and shall be easily reached by CHP officers without having to continually look down towards the unit.

Power to the MER antenna and reader shall be provided by the CHP vehicle's power source to ensure continuous use.

The MER installation of the FasTrak® antennas, readers and PDA devices shall be subject to approval by the JPA ED and the designated CHP representative.

6.3.1.2 PDA Display Unit

PDAs shall be used in support of both the MER and hand held enforcement devices.

The PDA shall provide CHP officers with readily accessible information on transponder identification numbers and related customer descriptive information.

The PDA shall also receive tag status downloads on, at least, a daily basis.

6.3.1.2.1 PDA Primary Functions

The PDA shall provide the following functions:

- The PDA shall receive tag status file data, which includes the daily updated list of the valid and invalid transponders as recognized by the BATA RCSC. This data shall be downloaded from the TDC when the PDA is connected to the Wide Area Network (WAN).
- The PDA shall also be able to receive and utilize tag status updates periodically throughout the day. This data shall be downloaded from the TDC to the PDA over a secure, high-speed wireless communications connection.
- The PDA shall contain software to compare a transponder's identification with the most current tag status file, which shall be resident on the PDA device, and determine if the detected transponder is linked to a FasTrak® account that is in good standing; and
- The PDA shall display information in an intuitive format that requires minimal interaction on the part of the user.

6.3.1.2.2 PDA Equipment Requirements

The PDA shall be small in size, weather proof, hardened for use inside and outside of the CHP vehicles and also suitable for use by CHP motorcycle officers in combination with the hand held device.

The PDA display screen shall be visible under all lighting conditions.

The PDA shall be able to receive data over a secure, high-speed, wireless WAN connection.

The PDA units that are mounted inside of the CHP vehicles shall be hard-wired to the vehicle power source to preclude the required use of battery power.

A rechargeable battery shall power the externally used PDA that allows use for up to 12 hours of continuous use.

6.3.1.3 Hand-Held Device

The hand held device shall allow the CHP motorcycle enforcement officers to confirm whether or not an SOV vehicle is equipped with a transponder that is linked to an account in good standing.

6.3.1.3.1 Hand Held Device Primary Functions

The hand held device shall provide the following functions:

- The hand held device shall be able to read a transponder and determine whether it is a linked to a FasTrak® account that is in good standing; and
- The hand held device shall operate within the FasTrak® Title-21 DSRC protocol and operating standards.

6.3.1.3.2 Hand Held Equipment Requirements

The hand held device shall be small enough in size, weather proof hardened for use outside and suitable for use by a CHP motorcycle officers.

6.3.1.4 Tolling Zone Beacon

The TZCs, which are located at each of the three (3) tolling zones, shall initiate a signal or beacon every time a tag read occurs when a transponder equipped vehicle traverses the tolling zone.

The beacon shall illuminate each time a tag is read and it is determined to be a valid FasTrak® transaction.

This verification shall be made automatically by the TZC by linking the transponder to the FasTrak® account and confirming that it is an account in good standing.

6.4 TOLL DATA CENTER SYSTEM REQUIREMENTS

The TDC shall function as the central and primary logical unit for the I-680 Express Lane System.

The TDC shall interface with the following ETS components that comprise the Express Lane System:

- Tolling zone lane controllers;
- Dynamic toll rate displays installed as part of each DMS;
- System enforcement equipment used by the CHP;
- The Caltrans Traffic Management Center;
- The BATA Regional Customer Service Center;
- The JPA I-680 Express Lane website link;
- The JPA I-680 Express Lane system operations center, including the Customer Service Representatives (CSR) and system operator workstations; and
- Other future HOT Lane TDCs in Alameda County.

6.4.1 Primary Functions of the TDC

6.4.1.1 Traffic Demand Pricing Calculation

The TDC shall periodically and dynamically calculate the toll rate based upon Express Lane and General Purpose Lane traffic speed and density information. The primary objective of toll-rate setting is to maximize facility revenues subject to the maintenance of a minimum level of service (LOS) constraint for the Express Lane, along with certain other constraints as listed within this section.

Traffic data shall be collected from the Express Lane via standard Caltrans double-loop electromagnetic VDSs that will be installed in the Express Lane approximately every mile along the 14-mile southbound I-680 Express Lane facility.

To ensure that toll facility optimization occurs in compliance with the objectives, and to effectively cover the entire roadway, RTMS devices shall be installed on the outside roadway approximately every mile along the southbound I-680 Express Lane corridor, as well as at least one point upstream and at least one point downstream from the I-680 Express Lane corridor. RTMS equipment shall be used to collect travel time and vehicle density data from the GP lanes and shall also be used as back-up for the loops that will be installed in the Express Lane to collect traffic density and speed information.

The TDC shall collect traffic density and travel time data at a minimum interval of every 15 seconds. The actual time interval of collection of this roadway vehicle data by the TDC shall be determined by the SI during the system design process.

The toll calculation shall effectively optimize tolls for the upcoming tolling interval so as to achieve the objective of maximizing facility revenues subject to the following constraints:

- The toll shall not be less than the user-specified minimum toll amount.
- The toll shall not be more than the agency-specified maximum toll amount.
- The toll amount shall remain constant for at least the user-specified minimum tolling interval to avoid driver confusion.
- The toll amount shall be recalculated at every minimum tolling interval. It is possible that the recalculation will result in the same toll amount in the next tolling interval.
- The toll amount shall not change by more than the agency-specified maximum change increment from any one tolling interval to the next.
- The toll shall be sufficient to ensure that the Express Lane maintains a minimum, specified LOS. The agency may choose to allow the maximum toll and maximum increment constraints to dominate the level-of-service constraint.
- Because there are multiple tolling points, meeting the LOS constraint may require “reserving” some capacity in the upstream segments by posting a higher toll for trips that include those segments than would otherwise be posted. Proposals should specifically address the bidder’s approach to meeting this constraint.

- The system shall have the capability to detect unstable or inappropriate toll amount calculations (e.g., due to unusual circumstances or equipment failure) and, as necessary, the ability to fall back to a table-driven toll schedule.

The agency-specified constraint parameters shall be set initially during the ETS design task of the project, but the system shall provide the ability for the JPA ED, or his/her designee, to modify them at any time in the future. All agency-specified settings for the calculation shall be adjustable by authorized, non-technical persons.

The initial implementation will be for a trip-based toll, but the system must also provide the ability to implement segment-based tolling with the above-listed constraints applied to each segment.

The toll-calculation portion of the TDC must be implemented as a separate module with a clearly- and completely-documented API that describes all interactions with other parts of the TDC with sufficient specificity that the toll-calculation module can be replaced in the future by another contractor.

The dynamic pricing method and calculation shall be formulated by the Systems Integrator during the ETS design phase of the project (Phase II) using the algorithm parameters incorporated into the ETS RFP as a guideline.

During Detailed Design Review, the Systems Integrator will produce a working model of the dynamic pricing calculation engine that demonstrates the capability of the chosen algorithms to set tolls in accordance with the above-stated objective function and constraints. The working model will simulate the toll-setting process by accepting simulation data where each record represents one 15-second time increment and will contain speeds and traffic-counts for each of 15 VDSs and 20 RTMSs. The working model will output toll amounts for each trip type for five-minute increments. The working model need not operate in real time (it may run much faster) and need not be implemented in the same programming language, hardware, or operating system as the operational ETS. The working model will incorporate a computer-screen or window that emulates the “dashboard” of the actual implementation. Such a dashboard should display current settings of agency-set parameters, manual override tools, indicators of system operating state, and measures of current system performance vis-a-vis, for example, the tendency of the calculation engine to be achieving stated objectives and constraints, comparisons of current versus prior, like-period performance, etc.).

A separate application, provided by the JPA, will generate the simulation data based on reasonable traffic patterns and distributions of values of time. Because the application that generates the simulation data will assign a value of time to each simulated vehicle and will count that vehicle in either the Express Lane or a General Purpose Lane in response to the previously-set toll, it will be possible to evaluate the extent to which the working model achieves revenue maximization given the constraints and the fact that the working model, like the operational ETS, will not know the distribution of values of time of approaching vehicles. It is expected that the chosen algorithms will use data from prior tolling intervals to estimate the distribution of values

of time in approaching vehicles, and that the performance of the working model will improve as it runs.

Proposals shall include descriptions and justifications of the bidder's intended toll-setting methods and shall, at a minimum, address each of the following:

1. The method and frequency of updating tolls so as to achieve facility objectives.
2. The use in the toll-setting process of the data collected by the system.
3. The degree of automation contemplated for the toll-setting process.
4. The method of determining initial or startup toll levels and system parameters.
5. The method, purpose, and duration of data storage.
6. The variables that will be used in calculating toll levels. (It is expected that the calculated tolls will take into account at least: upstream traffic conditions, traffic conditions in the various segments of the Express Lane, traffic conditions in parallel GP lanes, traffic conditions downstream, time of day, and weekday/weekend/holiday.)
7. The quantity and location of upstream traffic sensors needed to implement the toll-setting procedures.
8. The treatment of unusual circumstances (e.g., incidents, construction) in the Express Lane or in the GP lanes
9. The method(s) of detection of instability or inappropriateness (e.g., from unusual circumstances or equipment failure) of the calculated tolls.
10. The robustness of the toll-calculation algorithms to unusual circumstances.
11. The fall-back procedures when algorithmic toll-calculation fails to function properly.
12. Any parameters (other than those described herein) that the agency will be required to set.
13. A description of any mechanisms that would be designed into the dynamic pricing system to measure or adjust "tightness" of compliance with objectives and/or constraints.

The Systems Integrator shall provide, at a minimum, the following:

- A dynamic, real-time, parameter- or heuristic-driven toll rate calculation program that successfully achieves the stated toll and operational objectives and constraints;
- A toll rate calculation process that accounts for traffic densities in both the Express Lane and vehicle travel times in the GP lanes;
- A toll rate calculation program that accounts for disparities in traffic densities occurring simultaneously at various locations over the entire length of the I-680 Express Lane corridor;
- A toll-rate reset interval (e.g., every 5 minutes) that successfully controls Express Lane demand without creating driver confusion by changing too frequently, or sacrifices facility objectives by not changing frequently enough;
- An individual operator adjustable toll rate increment of $D.CC that successfully manages Express Lane demand to system criteria;
- A user settable minimum toll rate of $D.CC; and
- A dynamic pricing structure that provides the ability to toll by segment.

6.4.1.2 Express Lane Trip Assembly

The TDC shall be responsible for gathering and compiling vehicle, transponder, and toll rate data from all tolling zone lane controllers and creating individual trip revenue transaction records that shall eventually be sent to BATA for processing.

When a FasTrak® transponder enters the I-680 Express Lane and passes through a tolling zone, the transponder is detected by the antenna/reader and the lane controller verifies that the transponder is valid by comparing the transponder number to the tag status file that is resident in the lane controller's memory. Data, including the transponder number, date, time, tolling zone location of the transponder read, and the toll rate that was in effect when that vehicle entered the Express Lane shall be sent to the TDC. This series of events occurs every time a vehicle that is equipped with a FasTrak® transponder passes through an Express Lane tolling zone. Therefore, if it is a through-trip, each time the vehicle traverses a tolling zone a distinct transaction record shall be generated.

If a transponder is detected and it is determined to be valid, the lane controller shall send a command to illuminate the tolling zone beacon. The beacon shall illuminate within 0.1 seconds from the time in which the lane controller makes this determination. For each valid transponder read a transaction record shall be developed by the lane controller and sent to the TDC for future use.

The TDC computer shall then compile each of the vehicle transaction records and event data collected throughout the specific vehicle trip and determine where the trip began, which segments were traveled, when the trip ended, and which toll should be charged.

The TDC shall then determine whether or not there is a more recent Express Lane tolling zone transaction than the most recently received record by comparing the record times to indicate that the specific trip is now complete.

Based upon these internal calculations, the TDC shall then develop an Express Lane trip record, store this record in the proper location and send the trip record to the BATA RCSC for posting to the FasTrak® customer account and to collect the revenue associated with that Express Lane trip. The TDC shall be designed to store Express Lane trip records for at least 12 months.

The ETS shall include parameters that define the maximum duration for a single trip and logic that accounts for events such as a change in direction of travel or a communications failure with one or more tolling zone lane controllers.

The Express Lane System shall be configured to charge one toll per trip, for example the toll rate that is displayed on the DMS as the vehicle enters the Express Lane, but the ETS shall also include functionality that allows for segment-based tolling.

6.4.1.2.1 Toll Rate Safeguards

When a vehicle enters the I-680 Express Lane, the toll rate might change between the time at which the driver views the toll rate on the DMS and the time at which the driver passes through

the tolling zone. Based upon near real-time traffic density and speed data, the TDC shall calculate the amount of time it takes for a vehicle to view the toll rate and then pass through the tolling zone that is immediately downstream from the DMS that conveyed the toll rate to that vehicle operator. If the toll rate changes during that interval of time, the driver shall be charged the lesser of the two rates.

The TDC shall also include logic that accounts for DMS communication failures that result in the display of incorrect toll rates.

6.4.1.3 I-680 Express Lane Trip Reconciliation

The TDC shall include Express Lane trip audit and reconciliation functionality. It shall provide a secure user interface which will allow TDC personnel to view and reconcile Express Lane trips and revenue data. The interface shall also include reporting capabilities that allow users to create, execute, and store reports.

The interface shall provide detailed transaction data such as tag-read times and locations, toll rate data, and other supporting raw transaction information. This information shall then be used to verify that trips were properly created and can be reconciled.

The interface shall allow authorized users to make adjustments to the data and correct errors in compiled revenue bearing trips. Users shall be able to adjust individual transactions or bulk sets of transactions if it is determined that an Express Lane trip needs to be developed and/or modified.

The TDC database shall store configurable audit parameters, and provide a permanent audit record, or trail, of any adjustments that are made to summary or detail information.

6.4.1.4 Tolling Zone Operation Monitoring

The TDC shall include a secure, web-based monitoring interface that shall allow authorized users to view raw and summarized transaction and event data, as it occurs in real-time, at each tolling zone.

The TZCs shall broadcast data in near real-time to the TDC and this data shall be compiled and displayed in an easily understood, graphical manner.

Presented below is typical example data:

- Last 10 transponder reads;
- Transponder and/or traffic volume during the last 15 minutes, last 30 minutes, last hour, since 6:00 a.m., etc;
- Discrete messages and events from the roadside equipment, including
    1. Transponder Identification (ID);
    2. Transponder read time;

3. Transponder handshakes (the number of times during vehicle passage through a tolling zone that the transponder and the antenna communicate with one another);
4. Vehicle speed;
5. Traffic density on a particular segment;
6. Travel time data in the MF lanes;
7. Roadside equipment events;
8. VDS equipment events;
9. DMS events; etc.

The interface shall support JPA defined user roles, which includes providing different sets of data to different user categories. The interface is intended for use by CSRs, operations staff and maintenance personnel.

The interface shall protect customer information and operate under the requirements of California State privacy legislation.

6.4.1.5 TDC Reporting

The TDC shall provide a fully integrated reporting module to support trip generation and reconciliation, Express Lane operations, BATA record posting and reconciliation and JPA managerial system monitoring requirements.

The module shall include predefined traffic, revenue and CSR audit reports as well as support for ad hoc reporting needs.

The reporting system shall allow users to browse, choose, and run reports through a clearly displayed and user-friendly Graphical User Interface (GUI).

The reporting interface shall allow users to schedule reports to be run in the future.

The reporting interface shall allow reports to be output, saved, or printed in at least the following formats:

1. On-screen;
2. PDF;
3. HTML; and
4. Excel.

When accessing or running reports, the execute-to-display or execute-to-print time shall be less than one minute for each request.

The TDC report server shall be operational and available 24 hours per day, seven days a week.

Presented below is a list, at a minimum, of the required sample TDC reports:

- Express Lane Revenue Report;

- Express Lane Traffic Report (by segment and entire facility);
- Express Lane Trip Posting (to BATA) Report;
- BATA Express Lane Trip Reconciliation Report;
- Transaction and Trip Adjustment Report;
- Tolling Zone History Report;
- Detailed FasTrak® Transaction Report;
- CSR Audit Report;
- Toll Rate Change Tables by Tolling Zone;
- I-680 Express Lane Travel Time Report (be segment and by facility);
- GP Lane Travel Time Report (by segment and by facility);
- Equipment Maintenance Reports; etc.

6.4.1.6 Data Transmission

Data transmissions originating from the TDC shall occur automatically and utilize guaranteed delivery protocol.

Data communication between the TDC and the I-680 Express Lane website shall be via an Ethernet connection.

Data communication between the TDC and the BATA RCSC shall be via FTP for Express Lane trip records to and from a pre-configured drop box.

6.4.1.7 TDC Security

The TDC shall securely maintain Express Lane data through a standard login and password-based security system.

Secure user accounts shall be administered through a system administration interface.

The system shall operate under the provisions of all California State privacy laws. For example, customer data that is output for uses other than internal Express Lane operations shall be masked to maintain customer privacy.

The database shall use security service enterprise authentication for connections to the database. This will centralize database security in one location.

All users shall have their own user name and password that is the same across all databases.

Users shall have individual resource usage limits set for them to prevent unauthorized or excessive utilization of system resources.

Profiles shall be used to define resource usage limits by work activity or job type.

Users shall be granted profiles according to their job needs.

The database shall be able to restrict data access down to the row level.

6.4.1.8 Receipt and Downloading of Tag Status Files

The TDC will receive, at least once per day, updated tag status files from the BATA RCSC.

The file acquisition process shall adhere to the BATA Interface Control Document (ICD), a copy of which shall be presented in the appendices of the RFP.

The TDC shall automatically, upon receipt of tag status data from BATA and integrating the files into the TDC database, download either the full or an incremental tag file to each of the three tolling zone lane controllers. The incremental tag status file download would include any new FasTrak® accounts or changes to existing accounts.

The method of file download shall be according to the BATA RCSC ICD.

6.4.1.9 Mobile Enforcement Equipment Data Transmission

The TDC shall send tag status data to wireless on-board mobile enforcement equipment terminals to enable the CHP officers to enforce the Express Lane.

This secure data communications application shall be hosted on a wireless network to enable enforcement vehicles to obtain the tag status file data in a real-time basis.

6.4.2 System Data and Software Backups

All TDC data shall be properly backed up to ensure a continuous operation and virtually no loss of data or accounting information.

Activity logs shall be saved weekly on tape backup for 90 days.

Daily partial and weekly full backups of all data shall be conducted and properly logged.

Transaction logs and records shall be retained for five years.

6.5 REGIONAL CUSTOMER SERVICE CENTER INTEGRATION

6.5.1 BATA ICD

The Systems Integrator shall design and develop the TDC and its functions in accordance with any applicable requirements identified in the BATA Interface Control Document (ICD). A copy of the most current ICD is presented in the Appendix X. The Systems Integrator shall be responsible to maintain the proper TDC/BATA RCSC interface to ensure that the TDC is

properly interfaced to the RCSC when any ICD updates are implemented throughout the I-680 Express Lane ETS Contract.

6.6 SYSTEM INTEGRATION REQUIREMENTS

6.6.1 System to System Interfaces

The TDC shall be required to interface with three other systems to obtain data required for I-680 Express Lane toll collection and operations.

The BATA RCSC shall be the single point in which Express Lane toll trips shall be transferred for posting, which shall include debiting the toll charge from the FasTrak® customer accounts. The TDC shall also receive tag status files from the RCSC on, at a minimum, a daily basis, reconciliation files and transaction files.

The TDC shall provide the Caltrans TMC with traffic density and speed data from the Express Lane and travel time data from the MF lanes.

The incident detection process shall be the responsibility of Caltrans. In the event that an incident does occur that would require temporary suspension of the ETS and/or Express Lane closure, this shall be accomplished via a command issued by the TMC Manager to the DMSs.

As part of the I-680 Express Lane enforcement effort, the TDC shall also interface to the enforcement equipment that is provided to the CHP.

The TDC shall download the full CTOC tag status file at least once per day to the lane controllers, the MERs and the hand held enforcement devices. Incremental tag status file updates shall also be automatically sent from the TDC to the lane controllers and the enforcement equipment when they are received from the RCSC.

There will be incidents on southbound I-680 that may necessitate the closing of the Express Lane or the diversion of MF traffic to the Express Lane. These actions should only be taken by the CHP and authorized Caltrans TMC staff, with input from the JPA ED.

The TMC shall be included in the system network in order to facilitate emergency actions in the Express Lane.

All actions taken by TMC personnel shall be logged into the Express Lane TDC system database and reports generated that detail those actions.

6.6.2 Equipment Interfaces

6.6.2.1 Lane Controller

The TDC shall interface to each tolling zone lane controller via a real-time Ethernet connection.

The interface will support the transmission of raw vehicle, transponder, and event data. It will also support the transmission of daily incremental transponder status files and periodic toll rate data.

The interface shall be automatic and not require human intervention.

The interface control document shall be developed by the SI during Phase II of the project.

6.6.2.2 Dynamic Message Sign Rate Display

The TDC shall interface with each DMS via a real-time data and communications connection.

The interface shall support the transmission of message data as well as system status requests and be NTCIP compliant.

The DMS Interface Control Document (ICD) shall be supplied by the vendor that is selected by the SI.

6.7 COMMUNICATIONS NETWORK

Presented in the Appendix of this RFP is a copy of the I-680 Express Lane Communications Plan, which is for informational purposes only. Bidders should carefully review this Plan and assess the communications network information provided therein and determine whether their communications network design should be configured in a similar manner. It will, however, be the responsibility of the Systems Integrator to design, develop, test, implement and maintain a communications network that best supports Express Lane operations.

6.7.1 Tolling Zone to Tolling Zone

Tolling Zone to Tolling Zone communication shall be used to provide a redundant or backup communications path to the Tolling Data Center should the primary communications path fail.

- Between the South and Central Tolling Zones this communication path shall be provided by a point to point WiMAX wireless link; and
- Between the Central and North Tolling Zones the redundant communications path shall utilize fixed wireless.

6.7.2 Tolling Zone to TDC

Due to the distances between the Tolling Zones and the TDC and the relatively high costs associated with adding new underground infrastructure, the communication links between the Tolling Zones and the TDC shall utilize either leased data communication services or a wireless communication network solution.

These communication links shall provide a minimum 1.5Mbps data rate and shall have a high level of availability (99.999%).

6.7.3 TDC to RCSC

The network communication between the TDC and BATA RCSC shall utilize leased data communication services and shall be based upon availability of existing communications infrastructure, cost of implementation and performance requirements. The physical link between the TDC and RCSC shall be through frame relay technology.

Data communication between the TDC and the BATA RCSC shall be via FTP for Express Lane trip records to and from a pre-configured drop box.

6.7.4 TDC to Caltrans Traffic Management Center

The network communication between the TDC and the Caltrans TMC shall utilize leased data communication services and shall be based upon availability of existing communications infrastructure, cost of implementation and performance requirements. The physical link between the TDC and RCSC shall be through frame relay technology.

6.7.5 TDC to System Enforcement Equipment

Communications between the TDC and enforcement devices, including the MERs, the hand-held devices and the PDAs, shall utilize a secure, high-speed data connection to the PDA over a cellular data network.

- The cellular data communications network shall provide uninterrupted coverage over the entire length of the project.
- The cellular data communications network shall provide a minimum data rate of 128kbps.
- The communication link between the enforcement device and the TDC shall utilize Virtual Private Network (VPN) tunneling to establish a secure and encrypted connection.

6.8 JPA WEBSITE DEVELOPMENT

The SI shall design, develop, implement, operate, maintain and frequently update a website on behalf of the JPA and the BATA FasTrak® program. The primary purpose of the website shall be to provide I-680 Express Lane information to the public. The website shall be secure and shall be maintained with up-to-date and current security technology at all times. The TDC website shall provide, at a minimum, the following facilities to the public, accountholders and potential accountholders:

- General Information on the I-680 Express Lane configuration and operation;
- Via a web link to the BATA FasTrak® website, check an existing FasTrak® account by asking questions of the CSR for the following types of information:
    - Account status

  - Account balance
  - Recent I-680 Express Lane trips
  - Toll rates for recent trips

- Provide Information

  - RCSC location and hours of operation
  - List of tolling zones
  - I-680 Express Lane description
  - FasTrak® brochure
  - Frequently Asked Questions (FAQs)

- Link to the ACCMA website
- Link to the CHP
- Link to the 511.org FasTrak® website
- Links to road, travel, weather conditions and the Caltrans TMC
- Download I-680 Express Lane marketing materials and terms and conditions
- Web links to related transportation sites

The SI shall maintain access to trained staff for the timely response to requests for changes to the information presented on the website made by the JPA.

The SI shall provide a Spanish language version of the website in addition to the English version. The SI shall be responsible for translating and keeping current all Spanish version materials so that they are available on the Spanish version of the website. Support of any additional foreign language documents or languages, if required, would be handled as extra work.

The JPA shall have the option to request sets of changes to the static content (rate changes, re-branding, changes in operational information, including phone numbers, operational hours, tolling zone locations, etc.) on the website up to six (6) times per year at no additional cost to the JPA. Other changes shall be handled as extra work.

7. PROJECT MILESTONES

This part of the RFP provides an overall summary of the I-680 Express Lane ETS project phasing, scheduling, and testing requirements.

7.1 PROJECT PHASES

The development program under the Contract shall be divided into five (5) overall phases, generally delineated by successful completion of major test milestones. These phases include:

Phase I - Coordination with Roadway Contractor(s) – This phase shall include working closely with the Roadway Contractor(s) to ensure that their conduit and cable installation drawings are consistent with the ETS equipment and system design requirements;

Phase II – Design, Manufacturing, and Factory Test – This phase includes the design, development, fabrication and pretest of components of the entire ETS up to and including successful conduct of a full and detailed Factory Acceptance Test (FAT) of all equipment, software and subsystems in accordance with a pre-approved test plan, which shall be developed by the SI. This test shall be performed by the SI under the supervision of the JPA ED and the Systems Manager;

Phase III - Installation, Testing, and Approval - Field equipment and software installation, including on-site SI testing and debugging, conduct of a detailed Field Acceptance Test and approval for use of the ETS with all components and interfaces fully integrated for Express Lane operation;

Phase IV – System Performance Evaluation - Performance evaluation period of 90 days under actual I-680 Express Lane operation during which time any outstanding problems shall be immediately corrected by the SI. This phase also includes full ETS support, maintenance and operations by the SI, culminating in Final System Approval; and

Phase V - Warranty Period - Provision of full ETS maintenance, operations and system support during a Warranty Period that shall extend 270 days after issuance of Final System Approval. During this phase the SI shall correct any outstanding problems and transfer the maintenance program and the Express Lane operations over to others if the maintenance and operations options are not selected by the JPA. Successful completion of Phase V shall culminate in Final System Acceptance, which effectively closes the SI Contract.

The JPA will grant the SI written Notice-to-Proceed (NTP) to allow them to immediately commence with all required work for Phase I. This NTP shall be referred to as “NTP-1”. All work under Phase I shall be successfully completed by the SI, as determined by JPA and Systems Manager staff, within 90 days from the date in which the ED provides the SI with written NTP-1 to commence with Phase I.

A written "NTP-2" will then be submitted by the JPA to the SI which shall indicate the official commencement date of Phase II. Presented below in Table 7 are the contractual completion deadlines that are required for Phases II, III, IV and V of the work program:

Table 7 – Project Phases II, III, IV and V

PROJECT PHASE	COMPLETION DEADLINE CALANDER DAYS FROM NTP-2
Phase II – Design, Manufacturing, and Factory Test Approval	300
Phase III – Installation, Testing, and Approval	450
Phase IV – System Performance Evaluation Approval	540
Phase V – Warranty Period Completion	810

The ETS shall be ready for full use and revenue service not later than the time of Express Lane open to traffic, which is planned for December 20, 2010 or the date cited in the latest approved Program Schedule at time of award. If ETS equipment and/or software problems are detected during the system performance evaluation period, and the equipment and/or software is not operating at an acceptable level of performance as defined in the Contract, the SI shall be notified in writing. All problems or defects shall be promptly resolved by the SI. Final System Approval shall not be granted by the JPA until the ETS performs satisfactorily. It is also noted that within each overall Project phase there are several interim deliverable deadlines, as outlined in this document.

7.2 PROJECT SCHEDULE

The SI shall begin work on the date specified in the written NTP-1 for Phase I and NTP-2 for the remaining phases. NTP-1 will be issued by the JPA no later than 30 days subsequent to execution of the Contract.

Within 15 days after issuance of NTP-2 and prior to the project kick-off meeting, the SI shall prepare and submit a detailed Project Schedule, using MS project, outlining the order in which they propose that all of the work shall be performed and clearly identifying the critical path(s). The specific milestone completion dates and installation deadlines set forth in the Contract shall be clearly identified in the Project Schedule. The schedule shall be used as a basis for progress tracking throughout the course of all work on the Contract.

If a delay in the Project Schedule arises due to circumstances beyond the SI's control, the SI shall submit a revised Project Schedule within 10 working days after it is requested by the Systems Manager. Any failure or delinquency in submission of the Schedule shall be treated as default on the part of the SI who will then become susceptible to possible actions by the ED, including withholding of any payments due on the Contract.

7.3 WORK PROGRESS

The SI shall use all practical means to make the progress of the work conform fully to the Project Schedule. If the SI fails to meet the dates that are presented in the Project Schedule, the Systems Manager may require the SI to take any or all of the following actions, at no additional cost to the JPA:

- Perform overtime work;
- Increase the number of personnel assigned to the project; and
- Increase plant or machine capacity.

The SI shall prepare and submit to the Systems Manager monthly progress reports on the status of all major project items and activities. The monthly progress reports shall include an updated Project Schedule.

Project progress meetings shall be conducted monthly at the offices of the JPA, at a schedule to be proposed by the SI and approved by the JPA ED and the Systems Manager. The SI PM shall attend these monthly meetings. The purpose of these meetings will be to monitor progress, discuss design issues, plan for system installation, prepare for and conduct testing activities, start up of operations, etc.

In order for all of the Project team members to keep apprised of all important developments on the Project, bi-weekly conference calls will also be held. During more intensive periods of the Project more routine meetings and/or calls might be required.

7.4 PHASE I – COORDINATION WITH ROADWAY CONTRACTOR(S)

Upon receipt of the written NTP-1 letter from the JPA, the SI shall immediately mobilize Phase I resources required to work closely with a combined JPA-Caltrans ETS Coordination Team for duration of no more than 90 days. The primary purpose of this phase is for the SI engineers to carefully review, analyze and provide comments on the conduit and cable installation drawings to the ETS Coordination Team. The ETS Coordination Team will include representatives from the SI, JPA, ACCMA, Caltrans and each of the Roadway Contractor(s). This interaction shall be undertaken to ensure that the ETS equipment and system conduit and cable installation requirements are consistent with the conduit runs and cable pulls that are the contractually responsibility of the Roadway Contractor(s) (See Figures 2, 3, and 4 below).

The current Roadway Contract conduit and cable installation plans will be provided to the SI within seven (7) days of SI receipt of the NTP-1 letter for Phase I. The SI Project Manager and all appropriate hardware, software and installation engineers shall attend a meeting with the ETS Coordination Team no later than 10 days after receipt of the plans/drawings to carefully review the documentation together. The SI shall be required to clearly mark the Roadway Contractor(s) conduit and cable installation drawings, in red ink, within 10 days after the date of the initial meeting with the ETS Coordination Team. Follow-up meetings of the ETS Coordination Team might be required if all relevant comments on the conduit and cable installation can not be

provided subsequent to the initial meeting. The ETS Coordination Team will continue to meet during Phase II.

It should be noted that, depending upon the construction contract procurement process, there can be one, two or three Roadway Contractors. Therefore, the Bidder shall identify in their cost proposal a single unit price to provide the services and what the associated direct costs would be to perform all of the work that is required under Phase I.

Phase I shall be complete when it is determined by the ED and the Systems Manager that all required comments pertaining to the Roadway Contract conduit and cable installation drawings are properly annotated by the SI. The ED will document this decision by issuing a written Phase I approval letter to the SI. This approval will trigger payment for Phase I to the SI according to the payment terms that are described subsequently in this document.

7.5 PHASE II – DESIGN, MANUFACTURING, AND FACTORY TEST

Upon issuance of NTP-2 to the SI and submittal of the Project Schedule, a kick-off meeting shall be held within 30 days of issuance of NTP-2 by the JPA. At the kick-off meeting all appropriate lines of communication for both oral and written correspondence shall be established. Appropriate methods for documenting meetings, telephone conversations and other communications shall also be defined. The SI's Project Schedule shall be reviewed in detail and refined, as may be necessary. The Systems Manager shall submit, in writing, to the SI any required modification to the Project Schedule.

Table 5 below presents the submittal date, based upon number of days from NTP-2, for all of the documentation that is required under the Contract.

A plan for civil works, including a detailed description of any required tolling zone and/or TDC modifications, and all conduit requirements shall be submitted to the Systems Manager within the time period specified previously in this RFP.

Work during this phase shall include all ETS design, software development, hardware procurement and/or fabrication, shop testing, software testing, integration testing, software documentation and overall ETS design documentation culminating in a full and complete FAT. Periodically throughout this phase, the Systems Manager may visit the SI's development facility in order to inspect work in progress and might, from time-to-time, request reasonable demonstrations of ETS equipment, software, interfaces and subsystem operations. The Systems Manager will give reasonable advance notice to the SI prior to any factory visits. At such time that the SI has completed all development, fabrication and integration of the ETS, including detailed internal testing, the SI shall provide written notice to the Systems Manager requesting the scheduling of a full and complete FAT. The SI shall provide test scripts for the review and approval of the Systems Manager no later than 60 days prior to the scheduled date of the FAT.

Table 8 – Documentation Submittal Schedule

ITEM NO.	DOCUMENT SUBMITTAL	PROJECT PHASE	DUE DATE (CALENDAR DAYS)
1	Roadway Contractor (s) Conduit and Cable Installation Plan Review/Comments	II	90 Days from NTP-1
2	Project Schedule (re-submittal within 10 days if requested)	II	30 Days from NTP-2
3	Project Management Plan	II	30 Days from NTP-2
4	Preliminary Test Plan	II	60 Days from NTP-2
5	Software Development Plan	II	60 Days from NTP-2
6	Sepias and Shop Drawing Documents	II	90 Days from NTP-2
7	Sample of all On-Demand and Automatically Generated Reports	II	90 Days from NTP-2
8	Preliminary Installation Plan	II	90 Days from NTP-2
9	Quality Assurance Plan	II	90 Days from NTP-2
10	Software Specification	II	90 Days from NTP-2
11	Preliminary Design Document	II	120 Days from NTP-2
12	Factory Acceptance Test Plan	II	120 Days from NTP-2
13	Detailed Design Document	II	150 Days from NTP-2
14	Field Test Plan	II	180 Days from NTP-2
15	Final Installation Plan	II	180 Days from NTP-2
16	Wiring Diagrams	II	180 Days from NTP-2
17	Training Plan	II	270 Days from NTP-2
18	Maintenance Plan	II	270 Days from NTP-2
19	TDC Systems Operator Manual (Final)	II	30 Days before Phase III Approval
20	System Auditor Manual (Final)	II	30 Days before Phase III Approval
21	Customer Service Representative Manual (Final)	II	30 Days before Phase III Approval
22	CHP Enforcement Manual (Final)	II	30 Days before Phase III Approval
23	Maintenance Service Manual (Final)	II	30 Days before Phase III Approval
24	Draft Software Documentation	III	30 Days after Phase II Approval
25	Preliminary Maintenance Service Manual	III	60 Days after Phase II Approval
26	Parts List	III	60 Days after Phase II Approval
27	Schedule of Preventive Maintenance	III	60 Days after Phase II Approval
28	Final Draft Software Documentation	III	30 Days after Phase III Approval
29	Final Software Documentation	III	30 Days before Phase IV Approval
30	Final As-Built Drawings	III	30 Days before Phase IV Approval

The SI shall provide written results and evidence of his own testing prior to the FAT. If the proposed test scripts have been approved and, if after reviewing evidence of satisfactory SI internal testing of the ETS and all of it's interfaces, the Systems Manager will send a letter to the SI indicating that they are allowed to proceed with the FAT.

The FAT shall involve testing of all subsystems to be installed as part of the Express Lane ETS. All components shall be fully fabricated and integrated and ready for installation at the time of the FAT. At least one complete subsystem of each category shall be installed at the SI's site for the purpose of this FAT, including:

- One tolling zone subsystem, including the lane controller, a complete FasTrak® subsystem (reader, antenna and transponders), a tolling zone beacon, a loop VDS, an RTMS VDS, a DMS, plus all necessary communication equipment;

- A CCTV subsystem, including all necessary communications equipment;

- Enforcement subsystem, including use of the tolling zone beacon, the hand-held device and a MER, plus all necessary communication equipment;

- The TDC subsystem with a fully configured computer system including all software, printers, dynamic pricing algorithm subsystem, the Express Lane website, the CSR workstation operations, and any necessary communication equipment; and

- All of the TDC interfaces, including with the tolling zone subsystems (2-way), the other roadside equipment, the BATA RCSC (both ways), the Caltrans TMC, and the enforcement subsystem.

Any ETS functions defined in the Contract, as well as any Contract amendments, shall be subject to detailed testing and verification by the Engineer during the FAT. If, in the judgment of the Engineer, the FAT indicates that the ETS equipment and software appear to be functioning satisfactorily in accordance with a predefined test plan and all functional and technical requirements of the Contract, the Systems Manager shall issue written approval of the FAT and authorize shipment of equipment to the site for field installation.

This Approval of the FAT shall in no way reduce or eliminate the SI's full responsibility to resolve any problems and make the ETS operate in full conformance with the requirements of the Contract. Nor shall it limit the rights of the JPA or the Systems Manager, to bring ETS related problems to the attention of the SI at a later time.

7.6 PHASE III – INSTALLATION, TESTING, AND APPROVAL

With the issuance of FAT approval by the Systems Manager, the SI may be authorized to immediately commence shipment of the ETS equipment to the site to begin the installation phase. No actual equipment installation activity shall take place on site until FAT approval and an Encroachment Permit from Caltrans have been obtained and the Caltrans Resident Engineer

approves the access to the State's Right of Way as called for by the Encroachment Permit. However, if any conduit installation or other minor physical modifications at the tolling zone sites are required, these may be performed prior to approval of the FAT, provided the Encroachment Permit is in hand and the Caltrans Resident Engineer approves the access to the State's Right of Way. Any pre-FAT approval installation activity shall be approved, in writing, by the Systems Manager.

The SI's Installation Manager shall be on-site throughout the entire equipment installation period. The installation and site testing shall begin at the tolling zone that is identified in the Installation Plan and when successfully completed, installation may begin at the other tolling zone sites. The SI may present a proposal to partially overlap installation at the tolling zone sites for the consideration and approval of the Systems Manager. If an overlap in installation is proposed, it shall be clearly identified in the Project Schedule.

The SI and Roadway Contractors shall have various responsibilities pertaining to the installation activities. Presented in Figures 2, 3 and 4 are the power and communications conduit, cabling, and equipment installation responsibilities for the SI and the Roadway Contractors. The SI shall be required during Phase I to review the Roadway Contractor's power and communications conduit, conductor and ETS equipment installation plans and develop with the ETS Coordination Team a joint plan of action that will allow the parties to work in close coordination with one another.

Figure 2 – Contractor Civil Work Responsibilities: VDS Loops, VDS RTMS

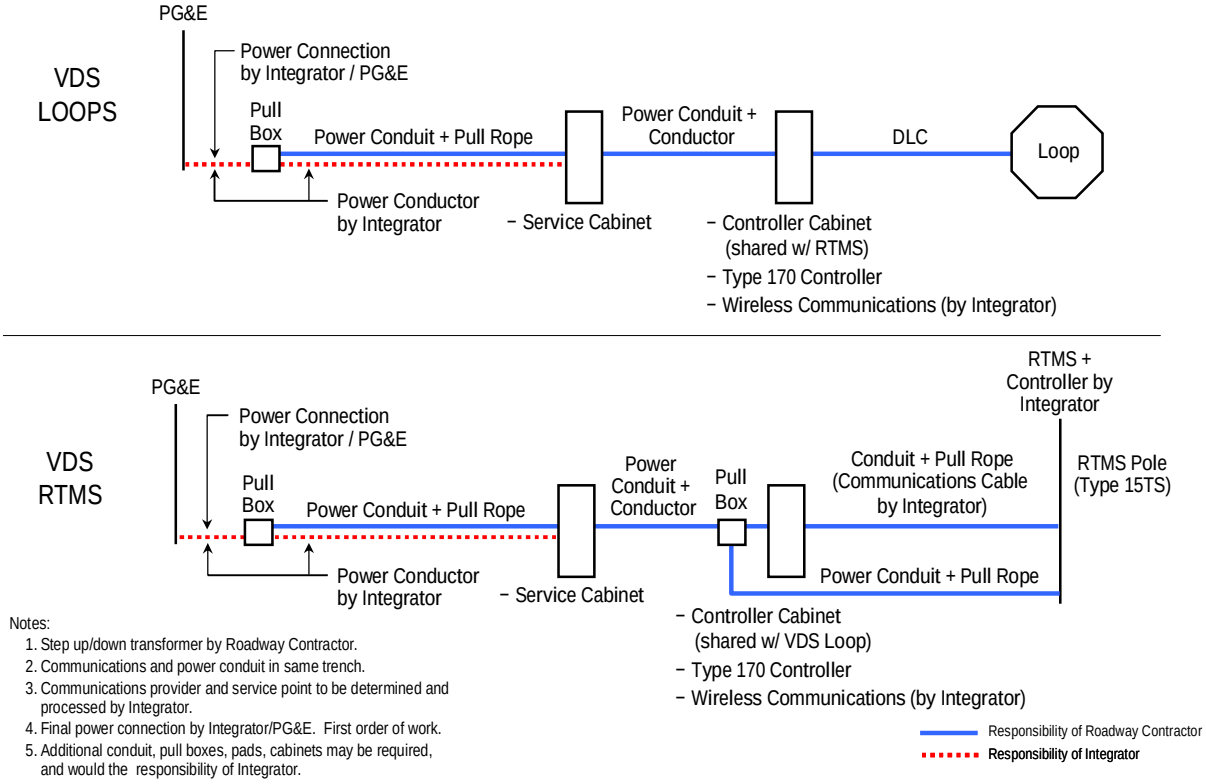

Figure 3 – Contractor Civil Work Responsibilities: DMS and Lighting, Tolling Zones

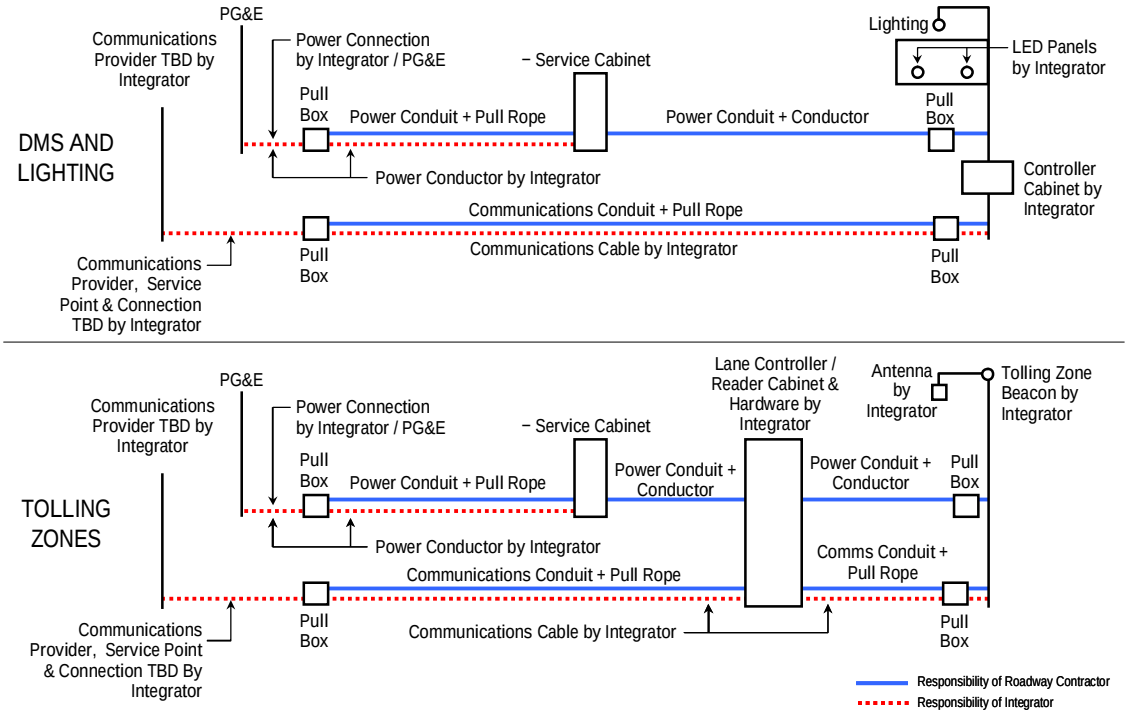

Figure 4 – Contractor Civil Work Responsibilities: CCTV, Highway and Sign Lights

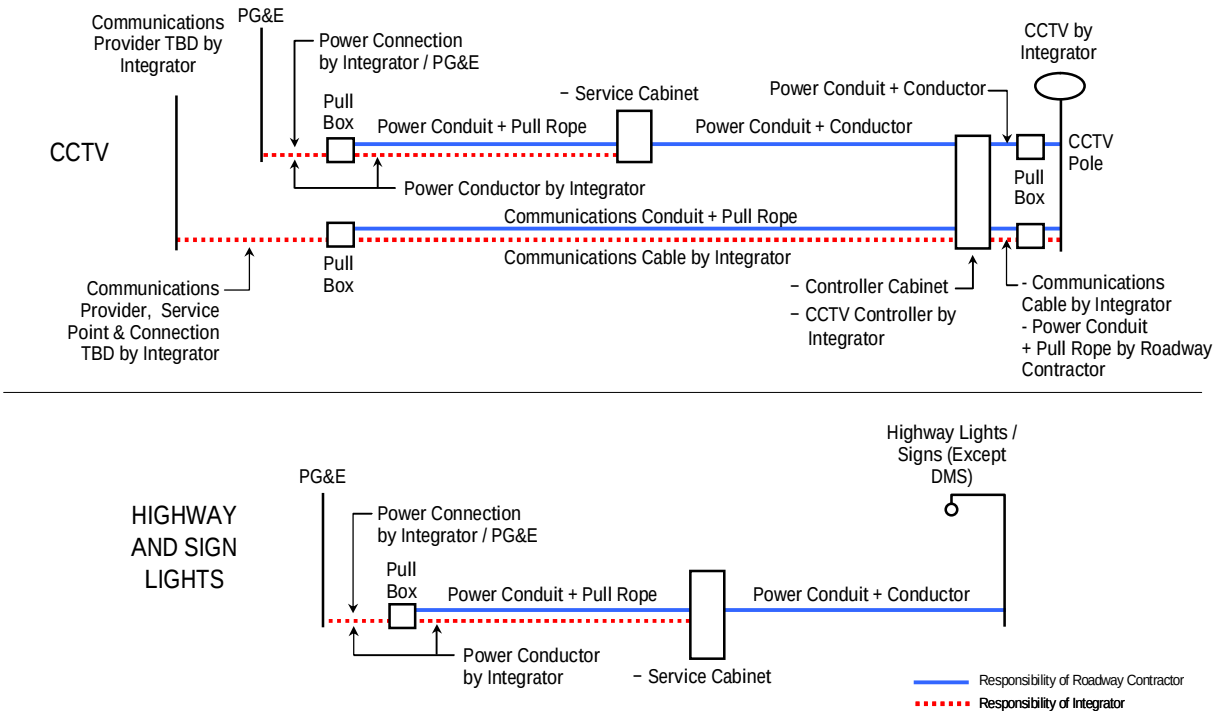

An Installation Plan for all civil works shall be submitted by the SI to the Systems Manager for review and approval. Actual installation will be inspected by, and subject to the approval of the JPA's designated representative. Installation of the ETS equipment shall be performed by trained personnel who are familiar with all aspects of the equipment. During the installation phase of the project, the SI shall provide a Resident Installation Manager conveniently located and accessible to the Systems Manager from a local office. During phases other than the installation phases, the SI's Project Manager shall be readily accessible via telephone and/or pager. In addition, the SI's Project Manager shall report to the site within 24 hour notification from the JPA or the Systems Manager.

In the event that any structure is damaged due to the SI's activities, such damage shall be repaired immediately at the SI's expense and to the satisfaction of the JPA and the Systems Manager, or to the satisfaction of Caltrans with respect to any Caltrans-owned facilities.

The SI shall make its own arrangement for the supply of communications and permanent power to all of the ETS equipment. The SI shall also make its own arrangement for temporary power, as needed, water and waste at the work site.

The SI, under the supervision of the Systems Manager, shall perform the Field Acceptance Test. This testing shall include individual lane equipment, subsystem testing, testing of the dynamic pricing algorithm, TDC testing, communication networks and any other reasonable test that may be required to verify proper functioning of the ETS.

Phase III field testing shall include full end-to-end simulated system load testing. Software simulators shall be used to generate realistic data at each tolling zone site. The simulated data shall pass through the entire ETS including the communications network and the TDC, and ultimately to simulated account postings at the RCSC, output reports, etc. Testing shall include a minimum of five (5) full days of real time simulated operations.

The conclusion of Phase III shall be signified by the completion of installation and testing of the new ETS, the completion of site verification tests at the three (3) tolling zone sites and at the TDC.

7.7 PHASE IV – SYSTEM PERFORMANCE EVALUATION

Phase IV will begin after the conclusion of Phase III and with the opening of the southbound I-680 Express Lane to traffic. If the SI is informed that the project is not ready to open to traffic at the completion of Phase III, the SI's work will be suspended until the roadway is ready to open to traffic. During Phase IV of the Contract, a 90 day period of observation and evaluation of the new ETS under actual use shall take place. The SI shall be required to fully support and maintain the ETS, in accordance with provisions set forth in the Maintenance Provisions of this document. Any problems detected during the monitoring of the ETS during Phase IV shall be immediately brought to the attention of the SI for resolution. At the conclusion of this evaluation period, if the ETS is considered to be operating fully in compliance with the RFP and the

Contract requirements, the Systems Manager will provide the SI with written notice of Final System Approval.

The SI shall also be responsible for TDC operations during Phase IV and through the Warranty Period. Starting at the beginning of Phase III and continuing through the end of Phase IV, the SI shall provide a full-time manager on-site to advise and assist the JPA in start-up and initial operation of the ETS. Although it will be necessary for this individual to be knowledgeable in all aspects of the ETS, he/she should be particularly familiar with the TDC operations.

7.8 PHASE V – WARRANTY PERIOD

The final phase of the Contract, Phase V, shall include continued ETS maintenance and TDC operations through the 270 day Warranty Period. The Warranty Period shall commence with the granting of Final System Approval to the SI by the Systems Manager.

All provisions set forth in this RFP and the other Contract documents shall be in effect throughout the Warranty Period. During this Period the SI shall supply adequate maintenance and operations personnel, spare parts, factory support and CSR oversight to ensure the ETS remains fully operational in full accordance with system performance requirements and that problems are corrected within the repair/replacement times as indicated in the maintenance section of this RFP.

If through and at the conclusion of the 270 day Warranty Period the system is operating in full accordance with the RFP and the Contract documents the JPA shall grant written Final System Acceptance.

The JPA shall advise the SI as to whether or not the Maintenance and Operations Option will be exercised at least 90 days prior to the scheduled completion of Phase V.

7.9 PROJECT MILESTONES

The following section shall define the project milestones and payment provisions for the Contract. Presented in Table 9 below is a chart that shows the major Express Lane Project milestones and the number of calendar days from NTP each of the milestones shall be completed by the SI. The SI shall successfully complete each milestone prior to proceeding with the next milestone activity.

Upon completion of each milestone, the JPA's Systems Manager will issue a letter of certification indicating that the SI has successfully completed the milestone.

Table 9 – Project Milestones for Phases II, III, IV and V

PROJECT MILESTONE	PROJECT PHASE	CALENDAR DAYS FROM NTP-2
Detail Design Review	II	270
Factory Acceptance Test	II	300
Equipment Installation	III	390
System Acceptance Test	III	450
Final System Approval	IV	540
Final System Acceptance	V	810

7.9.1 Detail Design Review

Successful completion of the Detail Design Review milestone shall be achieved when the JPA and the Systems Manager has reviewed and approved the Detail Design and accompanying documents submitted by the SI.

7.9.2 Factory Acceptance Test

Successful completion of the FAT milestone shall be achieved when the SI has demonstrated that the Express Lane System, as demonstrated during the FAT, has met all of the functional and performance requirements set forth in this RFP, in the Project Contract documents, and in accordance with the FAT Plan and procedures. This determination will be made by the ED and the Systems Manager.

7.9.3 Equipment Installation

Successful completion of the ETS equipment installation, including all of the roadside FasTrak® equipment, the TZCs, the VDS devices, communications hardware/software, TDC equipment and devices that are used to interface to external systems (BATA RCSC, Caltrans TMC, CHP system enforcement units), and the Express Lane website.

7.9.4 System Acceptance Test

Successful completion of the System Acceptance Test milestone shall be achieved when the SI has demonstrated, to the satisfaction of the ED and the Systems Manager, that the installed Express Lane System equipment has met all of the functional and performance requirements set forth in this RFP, in the Project Contract documents, and in accordance with the System Acceptance Test Procedures.

7.9.5 Final System Approval

Successful completion of the 90-Day Operational Test shall be achieved when, as judged by the ED and the Systems Manager, the Express Lane System has operated without equipment failure

and in accordance with the functional and performance requirements for a continuous period of 30 days without major equipment or functional failure. The 90-Day Operational Test might need to be extended in order to achieve a full 30-day period of continuous operation without any major equipment or functional failure. The determination of whether a subsystem or equipment failure should be categorized as major or not will be made by the ED and the Systems Manager prior to the commencement of the 90-Day Operational Test.

7.9.6 Final System Acceptance

Final System Acceptance shall be considered achieved when the JPA and the Systems Manager has certified that the 90-Day Operational Test has been completed and that all other project documentation and activities required of the SI have been provided.

Issuance of Final System Acceptance shall also indicate the beginning of the 270 day Warranty Period.

7.10 OPTIONAL MAINTENANCE AND OPERATION PERIODS

JPA reserves the right to extend the Contract for up to three consecutive one-year maintenance and operations periods. The JPA will inform the SI in writing, at least 120 days prior to the conclusion of the Warranty Period or current one-year maintenance and operations period, whether or not the JPA is electing to extend the contract for the next one-year period. During any one-year maintenance and operations period covered by such extended Contract, the SI shall maintain and operate the Express Lane System according to the requirements presented in this RFP and in the Contract documents. If the JPA extends the contract for any one-year maintenance and operations period, the SI shall obtain a performance bond covering the SI's maintenance and operations obligations during the entirety of such period in form and protection satisfactory to the JPA in its sole discretion, prior to the commencement of such maintenance and operations period. Bidders shall submit a cost for each of the three possible one-year maintenance and operations periods as part of the Cost Proposal.

7.11 QUALITY ASSURANCE

7.11.1 Quality Control Program

The SI shall establish and maintain an effective quality assurance and quality control (QA/QC) program to assure compliance with the requirements of the Contract. The program and procedures used shall be developed by the SI and carefully tailored to meet Contract requirements.

The SI's QA/QC program shall address all aspects of the Express Lane System from design through manufacture, installation, system acceptance, and final acceptance. Software as well as hardware shall be under the control of the SI's quality program.

The SI shall describe its QA/QC program in the technical proposal. At a minimum, the proposal response shall describe the following elements of the SI's QA/QC program as it shall apply to the I-680 Express Lane System.

- Inspection and Verification Program;
- Testing Program;
- Vendor Control Program (sub-contracting);
- Written Instructions for Control of Work;
- Calibration of Test and Measuring Equipment;
- Deficiency Tracking and Corrective Action Program;
- QA/QC Organization and Personnel Assigned; and
- Quality Records Maintained.

The SI shall assign to the Project an engineer whose sole responsibilities shall be the quality and reliability of the Express Lane System. This engineer shall be in place within 30 days of Contract award and shall remain assigned to the Express Lane System throughout the Contract until final acceptance of the system.

The SI's quality program shall include those internal inspections by an independent inspector or verifications necessary to ensure that the Express Lane System being provided meets the requirements of these specifications and the highest standards of quality.

Inspections and/or verifications shall be used by the SI for all appropriate steps related to the Contract and the Express Lane System. Inspections/verifications shall be appropriate for design, incoming materials, fabrication, in-process inspection, final assembly, unit and system testing, and at any other point in the development process at which quality must be assured.

Inspections or verifications for function or performance shall be accomplished in accordance with written procedures. Such procedures shall define the objectives to be met as well as the step-by-step inspection/verification to be accomplished. Accept/reject criteria shall be included within the written procedures. Inspections or verifications for trade workmanship may or may not require written procedures, as determined by the SI.

When inspections require JPA witnessing, those inspection procedures shall require JPA approval before scheduling the inspection.

Inspections/verifications for function or performance conducted by the SI shall require the generation of records that shall include the legible signature of the SI employee performing the inspection or verification. The JPA shall retain the right to review and audit such records either at the SI's place of business or after submission by the SI to the JPA.

System plans, drawings, work procedures, and inspection documents shall identify the inspections or verifications to be carried out. (Conventional QA terminology identifies inspection points as "I" and verification points as "V" on documentation.)

Status records of inspections/verifications shall be maintained by the SI to preclude the issue or use of material, equipment, or components that have not passed inspection/verification successfully. Non-compliant materials or products of any type shall be tagged and separated from acceptable product.

At a minimum, the final assembly inspection (which may be combined with the inspection at source) shall confirm that all applicable prior in-process or assembly inspections/verifications have been successfully completed before performance of the final assembly or source inspection. The SI shall not ship to the site any Express Lane System equipment, components, or software that have not completed all prior inspections or verifications required by the Contract and/or the SI's own QA/QC program.

The SI is advised that the JPA shall require not less than 30 working days for review and comment on inspection or test procedures submitted for approval unless longer periods are indicated within these specifications. The resubmission of inspection or test procedures should be anticipated on documents that generate numerous JPA comments or questions. The 30 working day period shall commence upon receipt of the document at the JPA office (date stamps shall be used).

Inspection and test procedures that require JPA approval shall have a format and content that, at a minimum, generally conform to the following:

- Test or inspection methodology (step-by-step instructions for conducting the test or inspection);
- Accept/Reject Criteria;
- Test or Inspection Report to be provided; and
- Any special requirements or concerns.

7.12 DESIGN AND IMPLEMENTATION

Presented in the Appendices to this RFP is a copy of the Systems Engineering Management Plan (SEMP) that was developed for the southbound I-680 Express Lane Project. This document includes a description of the various SEMP guidelines that the SI should use during the ETS design, development, integration, testing and implementation phases of the Contract. It is important to note that the SI is fully responsible to develop a series of system design, development, integration, testing and implementation plans as part of the Contract and, therefore, the SEMP is being provided for informational purposes only.

Also presented in the Appendices to this RFP is a copy of the Systems Integration Document Control Process document that the SI shall adhere to during the conduct of work on the Project. This document describes the various roles and responsibilities all of Project team members and the method in which the document control process shall be conducted.

7.12.1 Documentation Requirements

The SI shall submit all documentation and plans in the English language.

The SI shall submit documentation and Plans for JPA review and approval in sufficient time for a minimum of two iterations of review. JPA will endeavor to expeditiously review submitted documents but the SI should plan for a minimum JPA review time of ten (10) business days (excluding Holidays). Multiple simultaneous submittals may extend JPA's review times. Approval of documents shall not relieve or limit the SI's responsibility to provide systems in full compliance with the technical provisions in the RFP and in the Contract file. If corrections or improvements are requested, the SI shall resubmit the Documentation and Plans until such time as it is fully acceptable. Any need for re-submittal shall not be seen as a cause for delay in completing the project in accordance with the schedule requirements.

Deviations from the technical requirements that may be contained within the SI submitted documents, even though the document may be approved by JPA, shall not have the effect of modifying Contract requirements. Only specific requests to JPA from the SI for waivers or specification change that are formally approved by JPA shall void or change requirements in the Contract.

For the I-680 Express Lane System development portion of the work the documentation shall include, at a minimum, the documents listed below:

- Project Management Plan;
- Software Development Plan;
- Software Specifications;
- Configuration Management Plan;
- Preliminary Design Document;
- Detailed Design Document; and
- Various Test Plans.

7.12.1.1 Project Management Plan

The Systems Integrator shall be responsible to prepare a Project Management Plan (PMP), as well as developing, implementing, maintaining, and adhering to the Project management organization and system contained in the PMP. The PMP shall describe the organization, authority, reporting relationships, and procedures to be implemented to manage and control the Work. The Systems Integrator shall provide the personnel, equipment, and tools necessary to plan, design, construct, and perform all Work. The management organization must manage the Work in a manner that ensures safety, quality, and environmental sensitivity.

7.12.1.2 Software Development Plan

A detailed Software Development Plan (SDP) shall be prepared by the SI and submitted to JPA for review and approval. This plan shall indicate all elements of the software development process and shall include, but not be limited to, the following:

- Software Development Schedules;
- Software Development Tools;
- Assignments to Sub-contractors;
- Programming Languages;
- Software Development Quality Control and Quality Assurance;
- Software Testing Plan;
- Software Documentation Plan; and
- Software Management Plan.

A complete program of software testing shall be defined as part of the SDP Plan. The Integrator's testing plan shall include a summary of test procedures, dates and equipment to be used for each particular test. The SDP shall include a description of documentation to be provided for application programs, as well as incorporating standards to be followed and sample documentation, where available.

7.12.1.3 Software Specification

The Systems Integrator shall prepare a detailed Software Specification (SS) that includes a description of all programs and subroutines satisfying all functional requirements, as set forth in the Contract documents. Flow diagrams shall be included in the software specification for programs used in all subsystems to clearly identify data flow through the system and to illustrate the relationship between individual programs and/or subroutines.

A preliminary data dictionary and file/record document shall also be included in the software specification. This document shall define all data messages, records and files accessed by more than one program in the Express Lane System.

7.12.1.4 Configuration Management Plan

The SI shall develop and provide a Configuration Management Plan (CMP) for the review and approval by JPA to be adhered to throughout the duration of this project. A method of configuration management shall be utilized in order to efficiently and accurately track and monitor the progress and changes that occur in all areas of this project.

At a minimum, the CMP shall address the following areas:

- Configuration Control;
    1. Requirements Management.
    2. Deviation and specification change requests.
    3. Data Management.
    4. Configuration Audits;
        a) Functional.

b) Physical.

5. Approval Requirements for installed systems.
6. Testing Requirements for installed systems.

- Configuration Status Accounting;
  1. Document Control and the Library Function.
  2. Approved Documents.
  3. Revision History for Documents.
  4. Physical Item Content.
  5. Physical Item Where Used.
  6. Status of Changes.
  7. Changes by Product/Serial Number.
  8. Results of Configuration Audits.
  9. Configuration Management Accounting (As Designed, As Built, As Delivered).
  10. Mod Status of Installed Systems.

7.12.1.5 Back-Up and Disaster Recovery Plan

The SI shall develop and submit a backup and disaster recovery plan for the ETS in accordance with the relevant guidelines of the State of California. The plan submittal and the ETS design shall support the approved plan. During the operations phase of the Contract the SI shall conduct the plan testing described in the above referenced disaster recovery guidelines.

The ETS data storage system shall provide built-in redundancy using a technique such as data mirroring.

A new image copy of the entire ETS shall be created after any application and/or operating system upgrade performed by the SI. The monthly backup shall include all files, data, and software to completely restore the system to an operational state

7.12.1.6 Preliminary Design Documentation

The Preliminary Design Documentation (PDD) shall include detailed information on schedule, organization, technical approach, methodology, risk mitigation and other issues related to a complete plan for software development. The topics for the PDD shall include, but shall not necessarily be limited to, the following:

- Schedule;
- Organization;
- Methodology;
- Overall System Architecture;
- Requirements for each System or Subsystem;
- Project Management Plan, Quality Assurance Plan, Software Development Plan, SI Organization, Schedule Configuration Management Plan;
- Civil Work Plan;
- Examine and Assess Alternatives, where appropriate, for Each Subsystem or Component;
- Assess Design Issues and Associated Risk;

- Risk Mitigation;
- Assess Design Alternatives; and
- Status of environmental testing for system components.

In addition, the Systems Integrator shall address and show compliance with quality assurance, reliability, maintainability, software development, and other system requirements. Hardware concept drawings and preliminary level engineering specifications shall be submitted during this review. The PDD will be reviewed by JPA and Systems Manager staff and comments will be submitted to the SI. A meeting will be convened to discuss the JPA's comments and the SI shall then submit a revised version of the document. This process will repeat until the ED and the Systems Manager determine that the PDD is at an acceptable level. Once the ED and Systems Manager decide that the PDD is complete, a PDD approval letter will be sent to the SI.

7.12.1.7 Detailed Design Documentation

The Systems Integrator shall provide a functional narrative text, system and subsystem block diagrams, data flow diagrams, data structure diagrams, schematics, and any other graphic illustrations to demonstrate the technical adequacy of the system design approach and compliance for system hardware and software with quality assurance, reliability, maintainability, software development, and other requirements of these specifications.

The Detailed Design Documentation (DDD) shall be an extension of the approved PDD document. It shall include such detail as block diagrams, software design, testing procedures, operational procedures, etc. A list of equipment for each function along with a description of its role shall be provided.

The DDD shall be an extension of both the Contract documents and the System Integrator's Proposal. It shall include such detail as block diagrams, screen layouts, report formats, software design, testing procedures, operational procedures, and other pertinent design documentation. A list of equipment for each function along with a description of its role shall be provided. Any equipment listed in the DDD that has not been listed in the Cost Proposal or supplemental cost sheets shall be accompanied by the equipment specifications. Such equipment shall be provided at no increased cost to JPA.

The topics to be discussed in the DDD shall include, at a minimum, the following:

- Scope of Project;
- Master Schedule;
- Compliance Review Matrix;
- Document Requirements and Explanation, including for:
    - Roadside Equipment and Tolling Zone Design
        - Functionality
        - System Function Flow Chart – Each Tolling Zone Type
        - Hardware, Specifications and Integration
    - VDS Subsystem
    - TDC Host Server
    - Network Communications

- Maintenance Functionality
  - MOMS
  - MOMS Messages
  - Maintenance Service and User Interface
  - Spare Parts complement to be provided
- Hardware, Specifications and Integration
  - Network Communications
  - Maintenance Functionality
  - MOMS
  - Maintenance Service and User Interface
- Software / Database Design
  - Software Specification
  - Operating System (OS)
  - Programming Language
  - Version Management
- Reports
- Performance Standards
  - Capacities
  - Degraded Modes of Operations
  - Speed
  - System availability calculations
  - Environmental Requirements and Specifications
  - Network Communications
- Environmental Testing Results

The DDD will be reviewed by JPA and Systems Manager staff and comments and suggested changes will be submitted to the SI. A meeting will be held to discuss the JPA/Systems Manager comments and the SI shall then submit a revised version of the document. This process will repeat until the ED and the Systems Manager determine that the DDD is at an acceptable level. Once the decision is made that the DDD is complete, an approval letter of the DDD will be sent to the SI.

7.12.2 Testing Requirements

7.12.2.1 Test Plan

The SI shall prepare a detailed plan for testing all components of the Express Lane System. This plan shall include environmental certification, functional tests, performance tests, operational tests and all other ad-hoc tests that might be required as deemed appropriate by the ED and/or the Systems Manager. The SI shall submit a written report documenting the results for all tests performed and comparing them to the expected results.

Tentative dates for conducting the various tests shall be included in the Test Plan, as submitted by the SI. Reasonable modifications to these dates may be permitted during the course of the Work provided a written request for such changes is made at least two (2) weeks prior to the revised test date.

The Test Plan shall define the following:

Environmental Certification - The process for certifying that each item of tolling zone equipment satisfies the environmental requirements is presented above in Section 6.1.3. This is to be accomplished either by providing documentation for tests previously performed or conducting environmental testing to certify the equipment item.

Factory Acceptance Testing – The Integrator shall perform factory acceptance tests, which shall include testing of the hardware, software and various subsystems that will be provided by the Integrator. These tests shall be conducted at the Integrator's facility using their test facility. The purpose of the FAT is to internally verify as many of the system requirements prior to the on-site Express Lane System Approval Test as practical. To minimize the risk of later discovery of problems, the FAT tests will, as much as possible, be performed as an integrated system rather than as independent subsystems, using a representative system slice of the tolling hardware and integrated software that is assembled and connected using the WAN and LAN configured for the actual production system. JPA, and/or its representatives, reserve the right to witness and participate in the FAT.

Operational Testing- The Test Plan shall define procedures for evaluating the Express Lane System in a real world environment. The operational testing, which includes testing during the installation period and testing subsequent to the Express Lane System being open to traffic (90-Day Operational Test) is to be conducted and evaluated by the SI. The operational testing procedures shall include but not limited to the following:

- Review of recorded transaction data to identify any patterns that suggest erratic or faulty system behavior. Such indications may prompt further analysis or investigation.
- Review of MOMS and other maintenance data to identify reliability problems.
- Controlled testing through the insertion of test vehicles into real traffic.

Performance Audit - The Test Plan shall define controlled test procedures for evaluating the Express Lane System on an annual basis to ensure that system reliability and accuracy have not degraded over time and the Express Lane System continues to satisfy the functional and performance requirements. Procedures should be similar to those defined for Operational Testing. The SI shall also incorporate selected JPA ad hoc tests into the Performance Audit test procedures.

Test plans shall include details on the test environment including the hardware, software and test items and dependencies comprising the test environment, and the overall flow of the test activities. The Test Plan shall provide a matrix listing each requirement and how that requirement is to be tested or demonstrated, by inspection, analysis or test. For those requirements that are to be verified through testing, the matrix shall outline the particulars such that the test shall be clearly identified and a description or objective given for each test, including the requirement under test, and the conditions/scenario of the test and the number of test runs planned in addition to the method of verification. Each condition or scenario detailed within test plan shall also include the types of data to be recorded and the acceptance criteria for the test.

Conditions and scenarios should detail individual tests that relate to the capture, generation, contents, and transfer of all transaction types individually and in combination and their related requirements. Scenarios should also include tests that require the tolling zone to be able to

process a specific rate of transactions and successfully transfer those transactions in both normal operational modes and various degraded modes of operation.
Conditions and scenarios of the tests should include items such as lighting, type of vehicle, and the speed and movement of the vehicles through the Tolling Zone (left to right, straddling lanes, vehicle speed, and mix of vehicles with and without tags). The Express Lane System Acceptance and 90-Day Operational Tests shall include correlation testing where platoons of closely spaced vehicles, some with and some without tags, are used as test vehicles. These tests shall also include many different types of dynamic pricing testing to ensure that the software algorithms are working properly.

7.12.3 Factory Acceptance Test, Procedures and Reporting

The tests to be performed shall be according to internal plans and procedures of the SI and shall be witnessed by the SI's Quality Control staff. It is the responsibility of the SI to ensure best practices are being utilized to test with perceptiveness and thoroughness. Issues and problems uncovered during the FAT which result in a design or process change shall be reported to JPA. While intended as an internal test, JPA reserves the right to review all plans, procedures and data generated from the internal FAT. Special focus of the FAT should be on the operations of the dynamic pricing algorithms and how the change in pricing affects the LOS in the Express Lane. The SI shall clearly describe how this process will be tested at the factory level.

7.12.4 I-680 Express Lane System Acceptance Test

The tests to be performed shall be defined in the Express Lane System Acceptance Test procedures which the SI shall prepare and submit to JPA. Prior to conducting the System Acceptance Test all test scripts and scenarios shall be approved by JPA and the Systems Manager.

Tentative dates for conducting the various tests shall be included with the Express Lane System Test Plan. Reasonable modifications to these dates without delaying the overall schedule may be permitted by JPA during the course of the project work, provided a written request for such changes is made at least two (2) weeks prior to the revised test date.

If there are any failures or anomalies in conducting any test step, the SI shall take the necessary corrective action and the test shall be repeated. In the case that corrective action is undertaken by the SI, it shall perform any necessary regression testing to ensure that such corrective action has not adversely affected the system's ability to pass previously conducted test steps. If necessary this process shall continue until success is achieved.

If a System Acceptance Test indicates that the system and its components are satisfactory, JPA will issue written approval of the test for the configuration. If the results are not satisfactory, according to the JPA and the Systems Manager, the SI shall request the scheduling of a subsequent test re-run to occur after corrective action is completed.

Components used in the System Acceptance Test shall be production models, which would be suitable for installation at tolling zones, in the Express and GP lanes, at the TDC and at the TMC.

The System Acceptance Test shall be performed by the SI under the supervision of, and with the participation of, JPA staff and the Systems Manager. JPA staff and the Systems Manager shall be permitted to conduct ad hoc testing that they deem appropriate during or after the formal tests. Any observed repeatable deficiencies shall be brought to the attention of SI and these shall be incorporated in the test review and evaluation. Each installed piece of ETS and TDC equipment and subsystem shall be subjected to testing during the System Acceptance Test. Once JPA and Systems Manager staff determine that the FAT is successful, a FAT approval letter will be submitted to the SI.

7.12.5 I-680 Express Lane System Acceptance Test Procedures

The SI shall prepare detailed Express Lane System Acceptance Test procedures or scripts for the I-680 Express Lane System Acceptance Test. The Test procedures shall cover test set-up, step by step procedures for controlled tests, and the expected results for each step. Tests shall be "end-to-end" so that results are tracked trough the system, whenever possible. For example, the impact of parameters set by and communicated from the JPA TDC to outside systems shall be closely observed in the behavior of the lane systems or results of tests that are conducted in the lanes at the tolling zones are tracked at the TDC. JPA will arrange for reports of the transmitted test transactions and to be processed by the BATA RCSC and the posting information to be provided to the SI.

The following are illustrative of the aspects of the Express Lane ETS that are, at a minimum, to be demonstrated during conduct of the System Acceptance Test:

- Power up tests;
- Verify initialization;
- Verify data integrity (no loss of data);
- Verify diagnostic messages;
- Introduce failures;
- Verify diagnostic messages;
- MOMS Reporting;
- Normal FasTrak® Transaction Tests;
- Lane operational tests;
- Functioning of the TDC;
- TDC interface to the TZCs;
- TDC interface and data processing to and from the BATA RCSC;
- TDC interface to and the operation of the Caltrans TMC;
- TDC interface and data transfers to and from the CHP on-board devices;
- System enforcement equipment operation and processing;

- Transponder detection by vehicles at speeds from 5mph to 100mph through the tolling zones;
- Transponder detection during a platoon of vehicles;
- Proper association of vehicles and transponders;
- ETC transaction tests;
- Tag status file download and upload tests;
- Operation of the TDC customer service representative workstations;
- Production of various TDC traffic, revenue and audit reports;
- Tolling zone and TDC stand-alone operation tests; and more.

Once JPA and Systems Manager staff determine that the System Acceptance Test has been successfully completed, an approval letter indicating so will be submitted to the SI.

7.12.6 Express Lane System Acceptance Test Report

Within 15 days after the Express Lane System Acceptance Test has been successfully completed, the SI shall submit a detailed report of the results. The report shall include, at a minimum, the following:

- An executive summary of the overall test results highlighting the general conclusions of the testing and any problems found and corrected;
- A testing compliance matrix modified to include indications of any changes to the testing conducted from the initial submission and an assessment of the system's conformance to the requirements;
- Results of any JPA and Systems Manager requested ad hoc testing that was undertaken and brought to the SI's attention during or after the tests; and
- An appendix containing the detailed results of the performance of the test scripts.

7.12.7 90-Day Operational Test

The I-680 Express Lane System shall undergo a 90-day operational evaluation period after the entire Express Lane System has been installed and integration tested successfully completed. The Express Lane system will be closely observed as to its functional and performance characteristics during this 90-day period.

The Express Lane System shall operate reliably and perform in accordance with the specifications and Contract Document requirements during the test. The Express Lane System shall operate without equipment failure and in accordance with the functional and performance requirements for the last 30 days of the evaluation period or the operational test shall be extended until 30 days operation without major equipment failure is achieved. For this purpose major equipment failure is one that results in the loss of functionality related to system requirements in the RFP and the contract documents. Successful completion of the 90-Day Operational Test is required for the granting of System Acceptance.

7.12.8 90-Day Operational Test Procedures

The SI shall prepare 90-Day Operational Test Procedures defining the procedures and tests to be performed for the installed and operating Tolling Zones.

7.12.9 90-Day Operational Test Report

Within 15 days after the 90-Day Operational Test has been successfully completed, the SI shall submit a report of the results. The report shall include but shall not be limited to the following:

- A summary of the overall test results highlighting the general conclusions of the testing and any problems found and corrected; and
- An appendix containing the test results and data used in evaluating the system's operational performance.

7.12.10 Performance Audit

On an annual basis, the SI shall conduct a Performance Audit for each operational tolling zone to verify that system reliability and accuracy has not degraded over time and the Express Lane System continues to satisfy the functional and performance requirements that are presented in the system design documentation and all other Contract documents.

System transaction data and reports plus MOMS data for at least the 30 days preceding the Performance Audit shall be utilized in the analysis. In addition, controlled tests shall be conducted by utilizing test vehicles mixed with real life traffic. JPA and Systems Manager staff may choose to perform ad hoc operational testing as part of the Performance Audit. The initial Performance Audit shall be conducted and successfully completed as a condition of Final System Acceptance. A Performance Audit will be deemed successful by JPA and the Systems Manager if it is determined that the audit shows that the system requirements presented herein are met.

7.12.11 Performance Audit Procedures

The SI shall prepare Performance Audit Procedures defining the procedures and tests to be performed for the installed and operating Express Lane System. The procedures shall identify the test vehicles that are to be mixed with real traffic and the results to be obtained from the tests. The Performance Audit Procedures shall also define the operational data to be reviewed and the analysis that will be conducted on that data.

7.12.12 Performance Audit Report

Within 15 days after the Performance Audit has been completed, the SI shall submit a report of the results. The report shall include but shall not be limited to the following:

- A summary of the overall test results highlighting the general conclusions of the testing and any problems found and corrected; and

- An appendix containing the test results and data used in evaluating the system's operational performance.

7.13 WARRANTY PERIOD AND MAINTENANCE REQUIREMENTS

7.13.1 General

The SI shall establish and maintain an effective maintenance program for the new southbound I-680 Express Lane. The SI shall be solely responsible for full maintenance of the ETS, including the roadside and TDC hardware and software, from the time of commissioning through the Warranty Period and for the term of any successive maintenance options that may be exercised by the JPA. Maintenance shall be provided through field service, operational testing, remote diagnostics and control, and by maintenance personnel either on-duty or on-call 24 hours a day, seven days a week.

The standards for response time and repair time established herein shall be met by the SI until completion of the Warranty Period and through each of the maintenance periods that might be selected by the JPA. Where specific guidance is not provided for response and/or repair times, the total downtime of any component or subsystem shall not exceed six hours.

During the Warranty Period the SI shall replace, at no cost to the JPA, any piece of equipment, component or software that is deemed by the JPA to not be fully operating within the requirements that are set forth in the Contract documents.

7.13.2 Maintainability Goals and Objectives of the JPA

The Bidder shall provide with their technical proposal predictions for component and lane maintainability values (MTTR) derived from maintenance records or tests of the SI's product line. The SI proposed equipment and systems shall meet the dictated life, reliability and availability requirements that are presented above in Table 2 (in Section 6.1.1). The SI shall propose only those maintainability values (MTTR) that it can readily defend by engineering data and that it is prepared to be held accountable for during the on-line maintainability demonstration test and duration of the Contract.

The MTTR shall be the total corrective maintenance time divided by the total number of corrective maintenance actions during a given period of time. Corrective maintenance actions shall be those associated with relevant and chargeable failures only.

Response and repair time criteria cited herein shall apply 24 hours a day, seven days a week, for all components of the Express Lane System. The required maintenance analysis and Maintenance Plan shall be used by the SI to show how the criteria shall be met during the maintenance periods.

Response time is defined as the interval of time that transpires between the SI's notification of equipment or system failure and the arrival of the SI's maintenance technician at the failure site to perform the required troubleshoot/repair.

Unless written relief is given by an authorized JPA employee at the time of the maintenance call, the response time to all tolling zones covered by the Contract shall not exceed two hours. Emergency situations shall be handled on an exception basis.

Repair time is defined as the interval of time that transpires between arrival at the failure site by the SI's maintenance technician and complete resolution of the failed component or subsystem to full operational service. On average, repair times shall not exceed the specified MTTR values that are presented in Table 2.

7.13.3 Maintenance Analysis Requirements

The SI shall use analytical methods, appropriate models, and a documented study that shall lead to the definition of resources to be used for maintenance of the Express Lane System. This means that the number and types of maintenance service personnel assigned to maintenance of the Express Lane System shall be derived from a careful analysis of System and JPA needs. The spare parts required shall also be derived from a careful and documented analysis. In the case of both personnel and spare parts, the SI shall start its analysis from the contractually required response and repair times as set forth herein and provided in the Proposal.

Personnel and spare parts analysis shall carefully consider geographic distribution of the maintenance sites, vehicles available to transport personnel and spares, traffic and driving times, and back-up services available.

The maintenance analysis shall be documented within the appropriate sections of the maintenance plan. Approval of the maintenance plan shall depend in part on the quality and acceptability of the maintenance analysis incorporated into the plan.

7.13.4 Maintenance Personnel Experience Requirements

The Maintenance Plan that is required shall address the requirements for describing the maintenance organization and personnel to be used for maintaining the I-680 Express Lane System. This section provides additional requirements for personnel qualifications to be satisfied by the SI while maintaining the System.

The numbers and types of maintenance personnel to be used by the SI for maintaining the System as well as the distribution of personnel shall be the product of maintenance analysis and documented within the maintenance plan.

The Maintenance Manager shall be responsible for the overall maintenance activities for the Project. The individual designated as the Maintenance Manager must have demonstrated and sufficient experience and capabilities in maintenance activities that are similar in scope to what is expected for the Project, including, without limitation, specific experience in electronic toll system design projects, maintenance procedures of toll system equipment and subsystems, and managing field technician personnel. The individual designated as the Maintenance Manager by the SI shall require the approval of the JPA.

The SI shall not replace the Maintenance Manager without the prior written approval by the JPA. The SI's request to replace the Maintenance Manager shall name a proposed replacement manager, include his/her qualifications and include a statement that he/she will be available within thirty (30) days.

The maintenance service technicians (of any discipline) shall have an appropriate technical education background and at least three years of experience servicing electronic and/or toll system equipment.

Any maintenance subcontracts used by the SI shall be fully described within the Maintenance Plan submitted for the JPA approval, and the Subcontract agreements themselves shall be made available for review by the JPA upon request.

ETS software maintenance personnel shall have equal or greater education and experience as is required for the maintenance service technicians. The SI shall describe in the Maintenance Plan how ETC software maintenance support shall be provided.

All SI personnel shall be subject to appropriate security checks conducted to the satisfaction of the JPA. The SI shall obtain written approval from the JPA for all maintenance service personnel.

7.13.5 Maintenance Plan

The SI shall submit a detailed Maintenance Plan. The plan shall include maintenance staffing and administration, dispatch procedures, communication requirements, preventive maintenance techniques, schedules, and support from outside maintenance service (for example, computer manufacturers and COTS vendor suppliers), final maintenance equipment list, and other details as may be appropriate for inclusion in the Maintenance Plan.

If maintenance procedures require any lane closures these shall only be undertaken after the JPA and Caltrans has approved the lane closure and the SI shall be responsible for maintenance of traffic (MOT). The SI shall adhere to the MOT plans that are presented as attachments to this RFP. Three MOT Plans are provided; one for each of the 3 Roadway Contracts.

The Maintenance Plan shall include procedures to be used from the first use of the System through completion of the Maintenance/Warranty Period and throughout any of the maintenance options that may be selected by the JPA. The Plan shall address, at a minimum, the following:

- Standards and General Procedures;
- Equipment Maintenance;
- Software Maintenance;
- Maintenance Tools;
- Spare Parts and Inventory Control;
- Maintenance On-line Maintenance System (MOMS);
- Emergency/Corrective Maintenance Procedures;
- Preventive Maintenance Procedures and Schedules;
- Support Services:

- Personnel:
- Staff Location;
- Staff Qualifications;
- Training;
- Maintenance Facilities/Workshop(s);
- Maintenance Records;
- Failure Tracking and Corrective Action;
- Lane Closure Procedures (using the attached MOT Plans as the basis for procedures);
- Reliability and Maintainability Analysis and Calculation;
- Spare Parts Inventory Levels; and
- Maintenance Activity Reports.

7.13.6 Preventive Maintenance

The SI shall develop a preventive maintenance schedule designed to cover all electronic toll collection system components and to ensure optimum maintenance of the system to meet the contractually required reliability and maintainability values. The preventive maintenance schedule shall be submitted as part of the Maintenance Plan.

7.13.7 Corrective and Emergency Maintenance

The SI shall maintain a staff of trained personnel of sufficient quantity and quality to ensure that urgent repairs can be performed 24 hours a day, every day of the year. The SI shall be required to respond to a maintenance call and have a technician on-site and ready to fix the reported problem within 2 hours from issuance of the maintenance call that is generated and sent by MOMS. In addition, the SI shall be required to resolve the reported problem within 2 hours from the time in which the technician is physically on-site. The SI maintenance technician shall be responsible to report that they have reached the site of the reported problem by contacting the designated JPA representative.

7.13.8 Spare Parts

The SI shall provide and periodically maintain an inventory of all spare parts required to maintain the System according to the requirements presented herein. The initial inventory shall be a complete complement of spare parts. The SI shall maintain adequate reserve stock of spare parts and items of equipment located in proximity to the I-680 Express Lane. Inability to complete repairs due to the lack of timely availability of spare parts shall not relieve the SI of its maintenance obligations.

The SI shall maintain a comprehensive, accurate, and auditable parts and spares inventory at a system level by using the MOMS maintenance data base.

7.13.9 Maintenance Transportation

The SI shall provide all necessary vehicles to effectively maintain the System. All vehicles shall be registered in the State of California. Vehicles shall not carry any special identification unless authorized to do so by the JPA. All SI maintenance personnel on duty shall be equipped for rapid two-way communication with the Maintenance Manager's office (e.g., a beeper system).

Each SI vehicle shall be equipped, at the SI's expense, with the test equipment and spare parts that are required to effectively maintain the System. The test equipment and spare parts to be carried in each vehicle shall be documented in the Maintenance Plan.

7.13.10 Maintenance Facilities/Workshop

The SI shall be responsible for the provision of maintenance office and work facilities equipped and capable of supporting the maintenance of hardware and software for the System. The facility shall house spare parts, documentation, communications, and personnel necessary to maintain the System according to the requirements presented herein.

7.13.11 Maintenance On-Line Management System

The SI shall provide a Maintenance On-Line Management System (MOMS). MOMS shall allow for monitoring and reporting of equipment failures within the entire set of Tolling Zones that may be procured under the Contract.

MOMS shall be the focal point for all Express Lane System maintenance activities including routine preventive and corrective maintenance, real-time monitoring, repair calls, report generation, etc.

Access to MOMS information shall require entry of the user’s identification and password from which the system shall retrieve the user’s assigned role(s). Personnel access levels to MOMS shall be determined by JPA staff.

At a minimum, MOMS shall be capable of providing the following information:

- Current Tolling Zone operational status;
- Failure and/or malfunction location;
- Failure and/or malfunction description (w/ priority level);
- Spare parts inventory quantity and control;
- Part and equipment description (including part number and serial number);
- Record of last maintenance activity for a part entered by maintenance staff;
- Record of last preventive and corrective maintenance activity for all parts as entered by maintenance staff; and
- Historical system information/report generation.

The SI shall provide a monthly maintenance summary report to the JPA. The JPA reserves the right to review the maintenance records and database files for compliance with System performance requirements.

For every monthly maintenance payment period the SI shall prepare a report (“Maintenance Report”) that tracks malfunctions, the times that malfunctions were recorded, the time the

technician responded to the service call and the time the technician completed the repair. The report shall also provide the percent availability figures for the month.

7.13.11.1 Failure Detection and Reporting

One primary purpose of MOMS is to automate the issuance of repair/service calls to maintenance technicians.

MOMS shall be designed with the ability to generate work orders with little or no human intervention. Work order formats and specifications shall be determined during the design process and approved in writing by JPA, or their designated representative.

The MOMS shall provide for generating a minimum of four (4) different types of work orders, including ad hoc, preventive, corrective, and emergency maintenance.

The work order shall record the source of the work order, either as automatically triggered by MOMS monitoring, or the person reporting the failure, or both.

The MOMS shall also provide the capability to build ad hoc work orders for unusual maintenance activities. In addition, a work order shall include, but not be limited to, the following information:

- Date/Time of work order generation;
- Date/Time/Location of repair or maintenance call;
- Work order number (sequential); and
- Failure or malfunction description.

MOMS shall also provide the capability to generate blank work orders for repairs or malfunctions not directly reported by MOMS. Blank work orders shall still be generated for the sequential list maintained in MOMS.

MOMS shall allow both automatic and manually activated paging of technicians once a work order has been generated.

MOMS shall be designed to accommodate the assignment of priority levels for each failure type.

MOMS shall assign an initial priority level to each failure but shall provide for manual override to account for aspects that impact severity level and MOMS cannot assess.

The paging process shall check to determine the assigned active technician and update the dispatch grid to include the new service call.

MOMS shall monitor the disposition of service calls and shall generate a page to the maintenance technician and/or the maintenance manager for any work order not responded to or repaired within the required time.

7.13.11.2 System Monitoring

MOMS shall report the status and performance of all levels of Express Lane System equipment in real-time.

The performance monitoring function shall allow the user to select and observe the status and/or performance of several pre-defined portions of the Express Lane System. The following is a breakdown of the various levels, and, at a minimum, the degree of information required to be displayed for each level:

- Tolling Zone level components; and
- All equipment statuses for:
    1. Status of all Tolling Zone applications;
    2. Tolling Zone identification (ID);
    3. Tolling Zone location (Tolling Zone ID);
    4. Tolling Zone overall operation status (operational/degraded);
    5. Current operational status of each major subsystem; and
    6. Status of Tolling Zone communications link.

7.13.11.3 Availability Tracking

MOMS shall track and calculate the availability of each tolling zone by function.

The calculations shall be performed automatically whenever an availability report is run.

The availability report shall take into account the number of installed Tolling Zones and the length of outages affecting the particular Tolling Zone function.

7.13.11.4 Remote Access

MOMS shall be designed with the capability to allow technicians and other users to access the MOMS network over the internet.

Technicians or maintenance staff shall typically utilize this function while off-site or to log-in and close out a work order.

The dial-up access shall be designed to utilize simple dial-up connection tools typically found on laptop computers.

Access shall be password protected to prevent unauthorized users from gaining access to MOMS. A single network password shall not be acceptable for dial-up users. Each user shall use a personal password when logging into MOMS.

7.13.11.5 Inventory/Spare Parts Control

The SI shall provide an integrated spare unit and spare parts inventory control as part of MOMS.

This function shall be integrated with the work order generation function which shall automatically update and maintain the system and spare parts inventory based on work orders and technicians recording of parts used during work order closeout.

7.13.12 Force Majeure Repairs

The SI shall repair ETS elements that are damaged by Force Majeure events. After making the repair and presenting acceptable evidence of a Force Majeure repair and documentation of the costs incurred, the SI shall be reimbursed by the JPA on a time and materials basis. Maintenance repair response time requirements shall not apply in the case of Force Majeure events.

7.13.13 Maintenance and Service Manual

A Maintenance and Service Manual shall be provided to the JPA for review and approval. The schedule for the submittal of the draft and final versions of the Maintenance and Service Manual shall be according to the timelines described previously in Table 5. Five (5) copies of the Final Maintenance and Service shall be submitted by the SI. The Maintenance and Service Manual will be used primarily by the SI's maintenance staff but shall be provided to the JPA in the event JPA should at some point decide to take over the maintenance responsibility for the System. This comprehensive document shall provide complete detailed technical descriptions of maintenance operations including, at a minimum:

- Preventive Maintenance Schedule;
- Troubleshooting Techniques;
- Corrective Measures, both temporary and permanent;
- Maintenance Techniques (routine, preventive, and remedial);
- Location and availability of support services for all major components;
- Point-to-point component wiring schematics and logic signal flows; and
- Assembly and disassembly drawings, including exploded view drawings.

The Manual shall be prepared for technical personnel assigned to the maintenance of the ETS. This Manual shall include a general description, theory of operation, operator instructions, detailed electrical/electronic logic circuit analysis, mechanical functions, installation, test and trouble-shooting procedures, and preventive and corrective maintenance procedures. The Manual shall also contain diagrams, schematics, layouts and parts lists required to service each component and circuit board utilized in the System.

Standard service manuals for unmodified commercial products used in the System shall be acceptable if they contain details and accurate information in order to properly service the specific toll equipment supplied under the Contract. Large size diagrams and mechanical assembly diagrams do not have to be reduced or incorporated into the manuals if these drawings are delivered with the manuals.

The final Maintenance and Service Manuals shall be delivered to the JPA 90 days prior to Phase V Approval.

7.13.14 End of Warranty Period and Optional Maintenance and Operation Periods

The SI shall be responsible to satisfy the following conditions in order for the JPA to declare the end of any Maintenance Term. The SI shall not be released from their maintenance obligations until each of the below described conditions are met to the satisfaction of the JPA and this is documented, in writing, by the appropriate JPA representative.

- Inspection – A detailed inspection will be performed by JPA staff and the SI shall provide reasonable support for the inspection;
- Maintenance Records – The SI shall provide to the JPA all current and historical maintenance records, equipment and software support contact information, outstanding equipment and second source software warranty paperwork, service records, and other relevant documentation to the satisfaction of the JPA;
- Spare Parts, Components, Tools – The SI shall transfer to the JPA all spare parts, components, boards, tools, and other spare parts. The spare parts and components will be cross-referenced with MOMS to ensure that all parts and components are transferred to the JPA;
- Passwords – The SI shall provide all system passwords, user names, and other access and system security information to the JPA;
- Training – The SI shall provide maintenance training to designated JPA staff to the satisfaction of the JPA;
- Manuals and Drawings – The SI shall provide revised, fully updated versions of all Maintenance and Service Manuals, current Maintenance Plan, installation drawings, as-built drawings, and other relevant documentation to the satisfaction of the JPA; and
- Spare Equipment Repair – The SI shall repair all spare equipment, to the satisfaction of the JPA.

The JPA will not grant End of Maintenance Term Acceptance until each of the above listed conditions is met, to the satisfaction of the JPA.

7.14 TRAINING REQUIREMENTS

The SI shall provide a training schedule for TDC Operators/Auditors, TDC CSRs, selected CHP officers and maintenance personnel. A separate training course shall be provided, at a location in the Oakland area that is designated by the JPA, for each of the following categories of personnel:

- TDC Operators;
- TDC Auditors;
- TDC CSRs;
- CHP Enforcement Officers; and
- Maintenance Personnel.

Manuals that describe in detail the various operating parameters shall be developed and submitted by the SI for the TDC Operators, the TDC Auditors, the TDC CSRs, the CHP Enforcement Officers, and the JPA maintenance personnel. The documentation delivery dates are presented to Table 5. These manuals will be used as the basis for SI training of the various

types of System users. CHP Enforcement Officer and maintenance training shall include both classroom and field training.

SI training of the CHP Enforcement Officers, the TDC Operators, Auditors, and CSRs shall be successfully completed, as determined by the JPA staff, no later than 30 days prior to System commissioning. Training by SI staff of the JPA maintenance personnel shall be completed, to the satisfaction of the JPA, at least 30 days prior to the end of any Maintenance Period. Training courses shall be required for not more than five (5) persons.

7.15 PROJECT PAYMENT PROVISIONS

Payment for equipment, software, services and materials provided by the SI under the terms of the Contract shall be made at various intervals based on project milestones being successfully met, as determined by the ED and the Systems Manager. The below sections describe the payment process for each of the payment categories that are listed in the Cost Proposal table, which is provided subsequently in this RFP.

7.15.1 Retainage

Five (5) percent of all payments of any kind required to be made to the SI pursuant to the Contract shall be retained by the JPA. Payment of the five (5) percent retainage will be made in full upon JPA granting of Final System Acceptance.

7.15.2 Phase I – Coordination with Roadway Contractor(s)

Payment for Phase I will be made upon satisfactory completion, as determined by JPA and Systems Management staff, of all required work pertaining to the review and provision of red-line comments to the Roadway Contractor(s) conduit and cable installation plans and drawings. This payment is Item “A” from the Cost Proposal table.

7.15.3 System Software

Presented below is the payment process that will be followed for the System Software cost, which is Item “F” of the Cost Proposal table:

- 10% payment upon issuance of NTP-2 to the SI (this represents a project mobilization payment);
- 15% payment upon issuance of DDD approval letter;
- 25% payment upon issuance of FAT approval letter;
- 30% payment upon issuance of Systems Acceptance Test approval letter; and
- 20% payment upon granting of Final System Acceptance to the SI

7.15.4 Project Management

Payment for Program Management, which is Item "J" of the Cost Proposal table, will be made in 18 equal monthly payments. The first monthly payment will be made 30 days after issuance of NTP-2 and the final monthly payment will be upon issuance of Final System Approval.

7.15.5 ETS Hardware

Payment for the ETS Hardware, which includes Items "A", "B", "C", "D", "E", "G" and "H" of the Cost Proposal table, will be made based upon the SI meeting the following milestones:

- 60% payment upon all of the ETS equipment being received on-site (receipt of all ETS equipment on site this will be determined by the Systems Manager);
- 30% payment upon granting of Final System Approval; and
- 10% payment upon granting of Final System Acceptance.

7.15.6 Documentation

Payment for Documentation, which is Item "K" of the Cost Proposal table, will be made as follows:

- 50% payment upon JPA/Systems Manager acceptance of the documents listed from item #2 through item #13 on Table 5;
- 30% payment upon JPA/Systems Manager acceptance of the documents listed from item #14 through item #23 on Table 5 in conjunction with the granting of Final System Approval; and
- 20% payment upon JPA/Systems Manager acceptance of the documents listed from item #24 through item #30 on Table 5 in conjunction with the granting of Final System Acceptance.

7.15.7 Equipment Installation

Payment for Equipment Installation, which is Item "I" of the Cost Proposal table, will be made based upon the following schedule:

- 75% payment upon completion of the equipment and software installation process as determined by the Systems Manager; and
- 25% payment upon granting of Final System Approval.

7.15.8 Training

Payment for Training, which is Item "L" of the Cost Proposal table, will be made in full upon successful completion of the training process. The determination of completion will be made by the Systems Manager.

7.15.9 Warranty Period

Payments for the Warranty Period, which is Item "N" of the Cost Proposal table, will be made in nine (9) equal monthly payments. The first monthly payment will be made 30 days after the commencement of the Warranty Period and the final monthly payment will be upon issuance of Final System Acceptance.

7.15.10 Optional Maintenance and Operation Period(s)

Payments for the Optional Maintenance and Operation Period(s), which is Item "O" of the Cost Proposal table, will be made in 12 equal monthly payments. The first monthly payment will be made 30 days after the commencement of the Optional Maintenance and Operation Period and the final monthly payment will be upon completion of the 12th month of the Period.

8. COST PROPOSAL FORM

I-680 Express Lane ETS Project					
Cost Sheet					
Category	Description	Quantity	Units	Unit Price $US	Extended Price $US
A	**Express Lane Equipment**				
	Tolling Zone Controller	3	EA		
	Mounting Brackets, Cabinets, etc.	3	Set		
	Uninterruptible Power Supply (if required)	3	EA		
		Express Lane Equipment Sub Total			
B	**Tolling Zone Equipment**				
	CCTV Camera Assembly	3	EA		
	CCTV Camera Housing	3	EA		
	CCTV Camera System	3	EA		
	CCTV Communication Interfaces and Equipment	3	EA		
	Tolling Zone Beacons (including software)	3	EA		
	Uninterruptible Power Supply (UPS)	3	EA		
		Tolling Zone Equipment Sub Total			
C	**Common Equipment**				
	Dynamic Message Signs	3	EA		
	Vehicle Detection Stations in Express Lanes (including installation)	26	EA		
	Vehicle Detection Stations in General Purpose Lanes (including installation)	13	EA		
	CCTV Monitoring and Data Storage Station	1	EA		
	Video Monitors and Workstations	2	EA		
	Video Signal , Switching and Control Equipment	1	Set		
	CCTV System UPS (if required)	1	EA		
	Communication Interfaces and Equipment	1	Set		
	Mounting Brackets, Cabinets, etc.	1	Set		
	Hand-Held Enforcement Devices (including training)	5	EA		
	TDC Hardware (including 3 workstations, laser printer, communications equipment & UPS)	1	LS		
	TDC Office Furniture	1	LS		
		Common Equipment Sub Total			

D	**ETC Equipment**				
	ETC Readers	3	EA		
	ETC Lane Kits (including antenna)	3	EA		
	ETC Equipment Tuning	3	EA		
	Mobile Enforcement Readers (including installation)	5	EA		
		ETC Equipment Sub Total			
E	**Communications System**				
	Toll Data Center to Tolling Zones	1	LS		
	Toll Data Center to BATA RCSC and Caltrans TMC	1	LS		
	Toll Data Center to the CHP Enforcement Equipment	1	LS		
	Intra Tolling Zone Communications	1	LS		
	Vehicle Detection Systems in Express Lanes	26	EA		
	Vehicle Detection Systems in General Purpose Lanes	13	EA		
		Communications System Sub Total			
F	**System Software**				
	Tolling Zone Controller Software License	1	LS		
	Local Area Network (LAN) License	1	LS		
	Video Surveillance Software License	1	LS		
	Toll Data Center System Reports	1	LS		
	TDC Software (Dynamic Pricing Module, BATA RCSC Interface and access)	1	LS		
		System Software Sub Total			
G	**Test Bench Simulator**				
	Test Bench Simulator (including software)	1	EA		
	Lane Controller	1	EA		
	ETC Lane Subsystem	1	EA		
	Tolling Zone Beacons	1	EA		
	Standard Workstation	1	EA		
		Test Bench Simulator Sub Total			

H	**Spare Equipment**				
	Tolling Zone Controller	1	EA		
	ETC Lane Subsystem	1	EA		
	Standard Workstation	1	EA		
	Vehicle Detection System in Express Lanes	6	EA		
	Vehicle Detection System in General Purpose Lanes	3	EA		
	CCTV Camera	1	EA		
	Mounting Brackets, Cabinets, etc.	1	Set		
		Spare Equipment Sub Total			
I	**Equipment Installation**				
	CCTV Installation (including mounting & civil work)	3	EA		
	DMS Installation (including LED mounting, brackets and civil work)	3	EA		
	Tolling Zone Equipment Installation	3	Per Zone		
	TDC Equipment Installation	1	LS		
	Lane Closures	1	LS		
		Equipment Installation Sub Total			
J	**Project Management**				
	Project Management	1	LS		
		Project Management Sub Total			
K	**Documentation**				
	Documentation	1	LS		
		Documentation Sub Total			
L	**Training**				
	Training	1	LS		
		Training Sub Total			

M	**Phase I - Coordination with Roadway Contractor(s)**				
	Phase I - Coordination with Roadway Contractor(s)	1	LS		
		Coordination w RW Contractor(s) Sub Total			
N	**Warranty Period**				
	Warranty Period Technical Support (hardware & software)	1	LS		
	Maintenance During the Warranty Period	1	LS		
		Warranty Period Sub Total			
Category	**Subtotal Summary**				
A	Express Lane Equipment				
B	Tolling Zone Equipment				
C	Common Equipment				
D	ETC Equipment				
E	Communications System				
F	System Software				
G	Test Bench Simulator				
H	Spare Equipment				
I	Equipment Installation				
J	Project Management				
K	Documentation				
L	Training				
M	Phase I - Coordination with Roadway Contractor(s)				
N	Warranty Period				
		TOTAL SYSTEM COST			
O	**Optional Maintenance and Operation Periods**				
	First 1-Year Period	1	EA		
	Second 1-Year Period	1	EA		
	Third 1-Year Period	1	EA		
		Optional Maintenance & Operation Periods			

9. APPENDICES

9.1 I-680 Express Lane System Concept of Operations Document

9.2 I-680 Express Lane System Communications Plan

9.3 I-680 Express Lane Systems Engineering Management Plan

9.4 I-680 Express Lane System Enforcement Document

9.5 I-680 Express Lane System Requirements Document

9.6 I-680 Express Lane Electrical Plans

9.7 I-680 Express Lane Signing and Striping Plan

9.8 Maintenance of Traffic Plans (1 for each of the 3 Roadway Contracts)

9.9 I-680 Systems Integration Document Control Process Plan

9.10 BATA Regional CSC Interface Control Document (ICD)