COUNTY	ROUTE	KILOMETER POST TOTAL PROJECT	SHEET No	TOTAL SHEETS
Ala	580	R16.5/16.9	4	21

REGISTERED CIVIL ENGINEER 8/15/06

PLANS APPROVAL DATE

REGISTERED PROFESSIONAL ENGINEER Michele O. Johnson No. C59116 Exp. 06/30/08 CIVIL STATE OF CALIFORNIA

ALAMEDA COUNTY CONGESTION MANAGEMENT AGENCY
1333 BROADWAY, SUITE 220
OAKLAND, CA 94612

T Y LIN INTERNATIONAL | CCS
2010 CROW CANYON PLACE SUITE 350
SAN RAMON, CA 944583

CALCULATED/ DESIGNED BY	DATE 7/06	REVISED BY	DATE REVISED
CHECKED BY	NMS 7/06	SM	9/06

NOTES:

1. SEE RSP B15-6 FOR ADDITIONAL DETAILS.
2. FOR FL ELEVATIONS, SEE SHEET D-1.

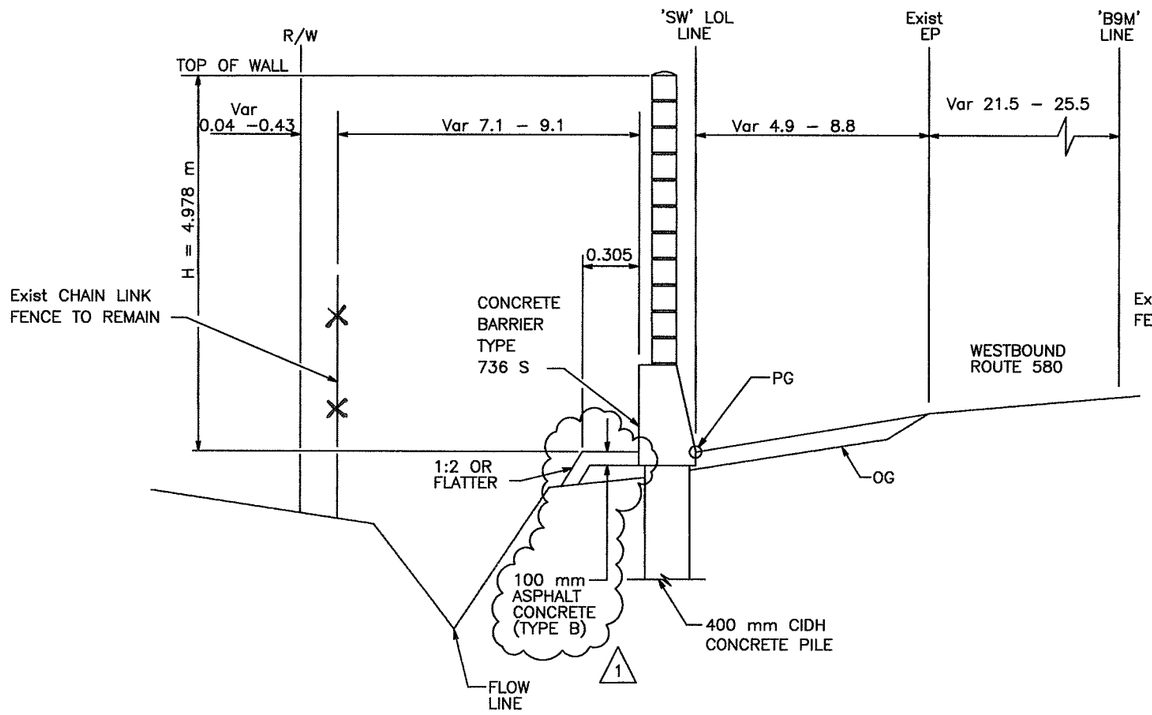

TYPICAL SECTION

B9M 220+95.190 TO 221+12.502
B9M 221+18.712 TO 221+40.000

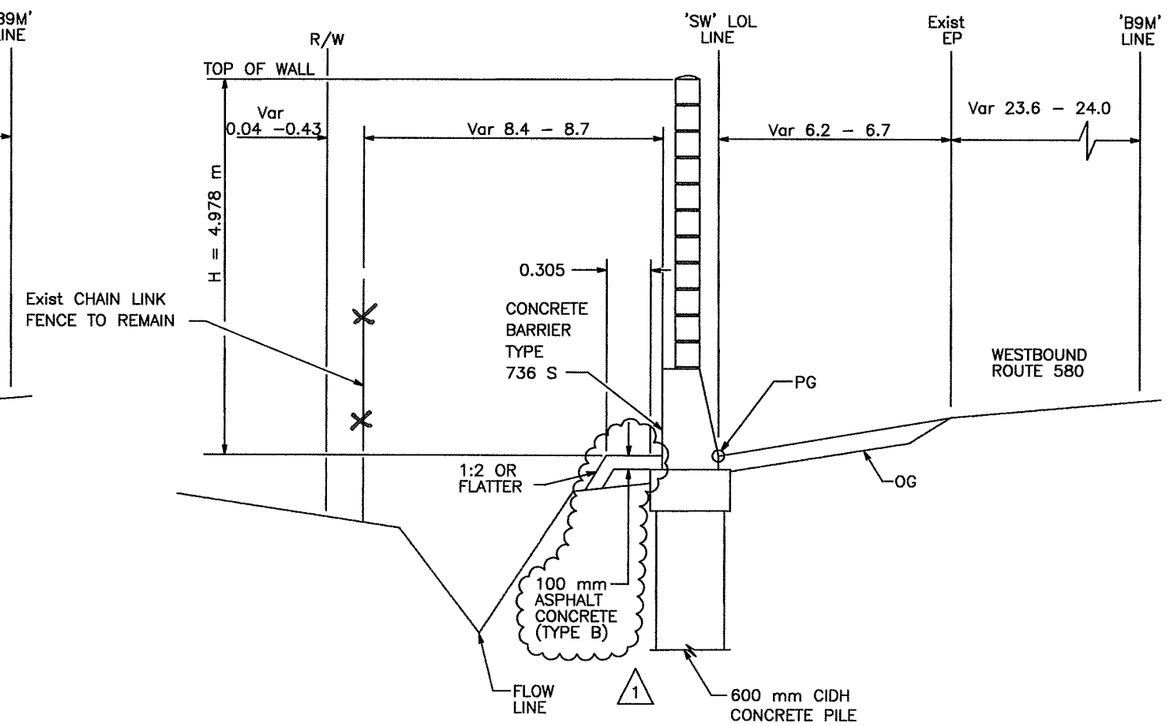

TYPICAL SECTION

221+12.502 TO 221+18.712

1 ADDENDUM NO. 1 – SEPTEMBER 8, 2006

ALL DIMENSIONS ARE IN METERS UNLESS OTHERWISE SHOWN

SOUND WALL DETAILS
TYPICAL CROSS SECTIONS

NO SCALE

SW- 3

THIS PLAN ACCURATE FOR SOUND WALL WORK ONLY

FOR REDUCED PLANS ORIGINAL SCALE IS IN MILLIMETERS 0 20 40 60 80

USERNAME => $USER
DGN FILE => $REQUEST

FILE: P:\320076\Sheets\SW259\Addendum 1\580SW259SW03.dgn
DATE: 06-Sep-06 15:11

LAST REVISION 00-00-00

COUNTY	ROUTE	KILOMETER POST TOTAL PROJECT	SHEET No	TOTAL SHEETS
Ala	580	R16.5/16.9	5	21

REGISTERED CIVIL ENGINEER 8/15/06

PLANS APPROVAL DATE

REGISTERED PROFESSIONAL ENGINEER Michele O. Johnson No. C69116 Exp. 06/30/08 CIVIL STATE OF CALIFORNIA

ALAMEDA COUNTY CONGESTION MANAGEMENT AGENCY
1333 BROADWAY, SUITE 220
OAKLAND, CA 94612

T Y LIN INTERNATIONAL | CCS
2010 CROW CANYON PLACE SUITE 350
SAN RAMON, CA 944583

CALCULATED/DESIGNED BY	SM	DATE 7/06	REVISED BY	SM
CHECKED BY	NMS	7/06	DATE REVISED	9/06

NOTES:

1. SEE RSP B15-6 FOR ADDITIONAL DETAILS.
2. FOR FL ELEVATIONS, SEE SHEET D-1.

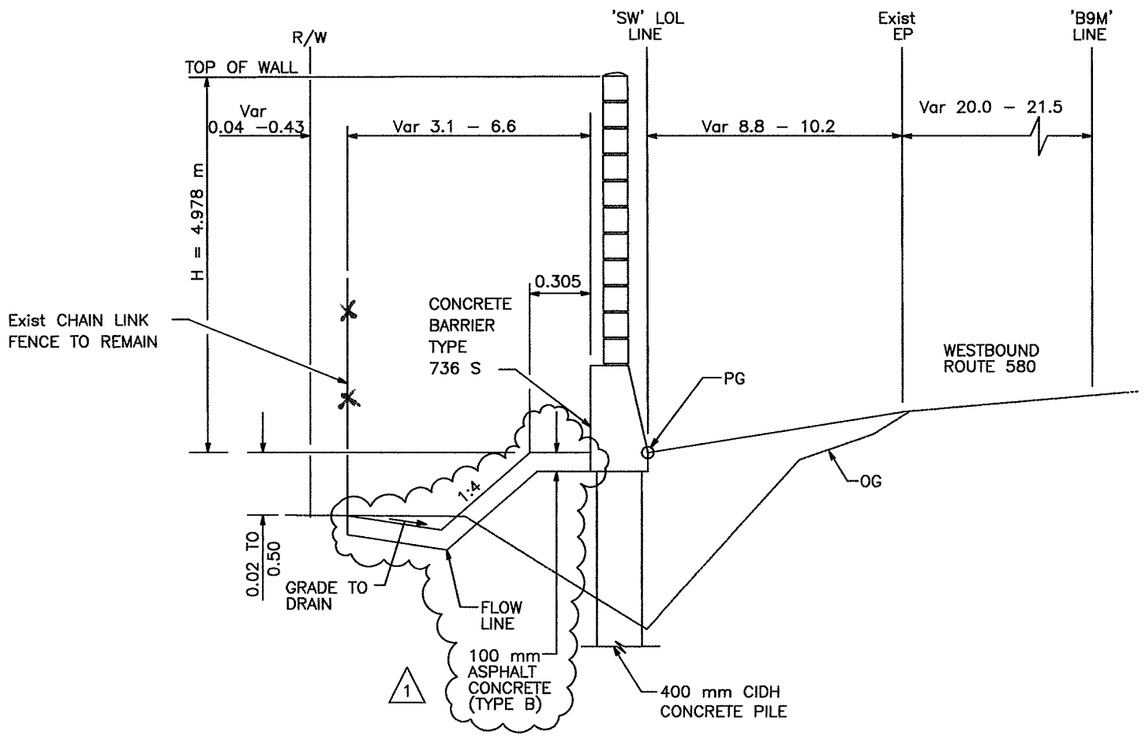

TYPICAL SECTION
B9M 221+40.000 TO 224+04.244
B9M 224+10.454 TO 224+13.707

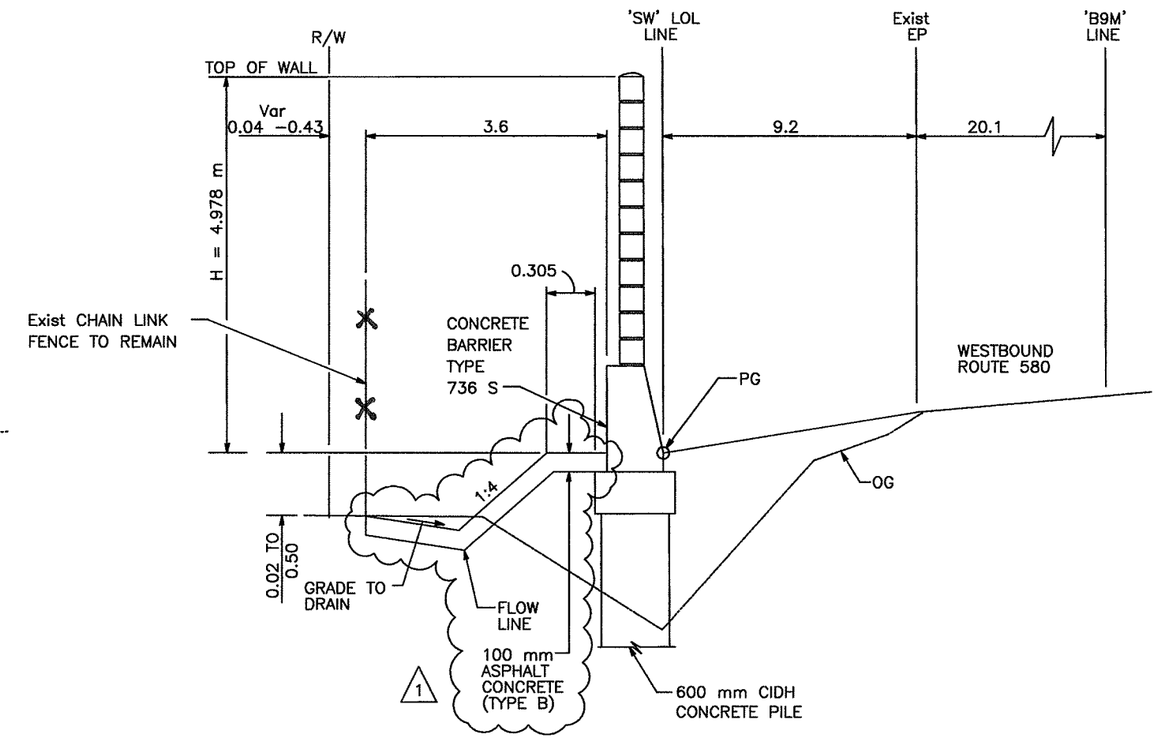

TYPICAL SECTION
B9M 224+04.244 TO 224+10.454

1 ADDENDUM NO. 1 – SEPTEMBER 8, 2006

ALL DIMENSIONS ARE IN METERS UNLESS OTHERWISE SHOWN

SOUND WALL DETAILS
TYPICAL CROSS SECTIONS

NO SCALE

SW- 4

THIS PLAN ACCURATE FOR SOUND WALL WORK ONLY

FILE: P:\320076\Sheets\SW259\Addendum 1\580SW259SW04.dgn
DATE: 06-Sep-06 15:13
LAST REVISION 00-00-00

FOR REDUCED PLANS ORIGINAL SCALE IS IN MILLIMETERS 0 20 40 60 80

USERNAME => $USER
DGN FILE => $REQUEST

COUNTY	ROUTE	KILOMETER POST TOTAL PROJECT	SHEET No	TOTAL SHEETS
Ala	580	R16.5/16.9	10	21

REGISTERED CIVIL ENGINEER 8/15/06

PLANS APPROVAL DATE

REGISTERED PROFESSIONAL ENGINEER
Michele O. Johnson
No. C69116
Exp. 06/30/08
CIVIL
STATE OF CALIFORNIA

ALAMEDA COUNTY CONGESTION MANAGEMENT AGENCY
1333 BROADWAY, SUITE 220
OAKLAND, CA 94612

T Y LIN INTERNATIONAL | CCS
2010 CROW CANYON PLACE SUITE 350
SAN RAMON, CA 944583

LEGEND:

EROSION CONTROL (TYPE D)

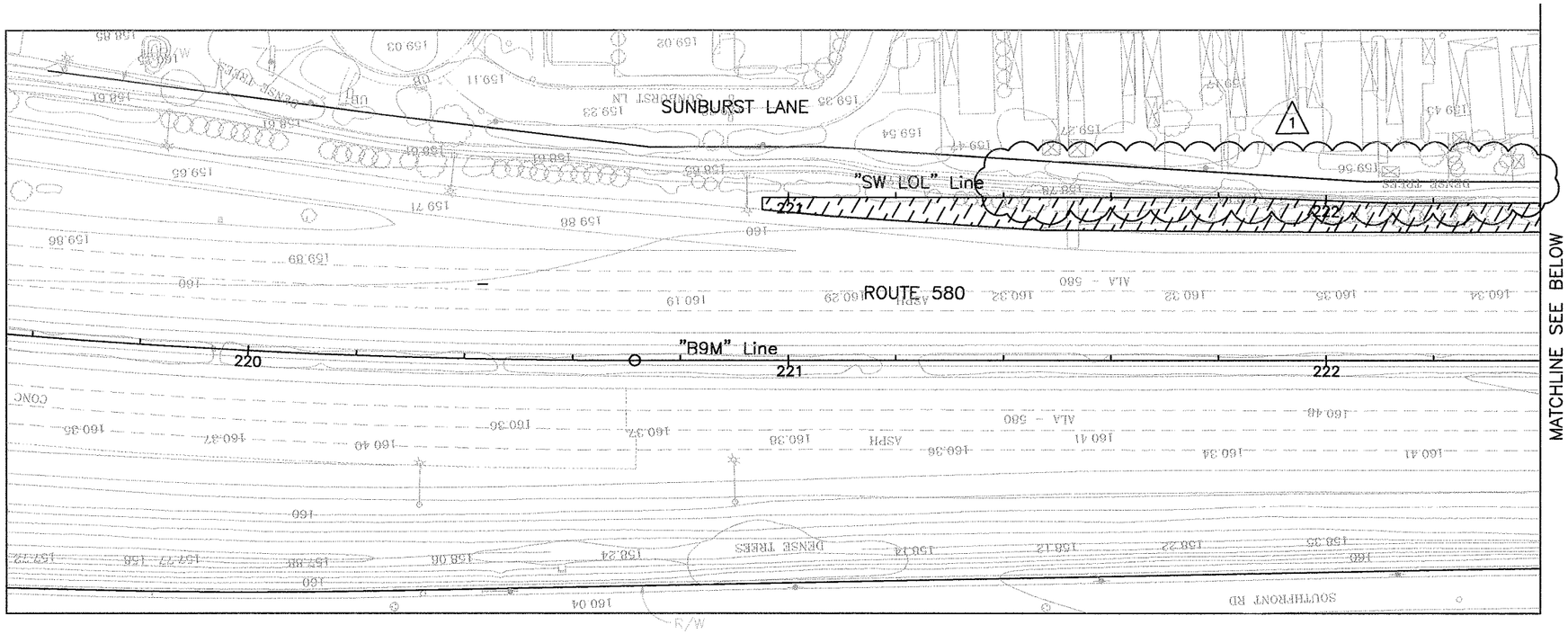

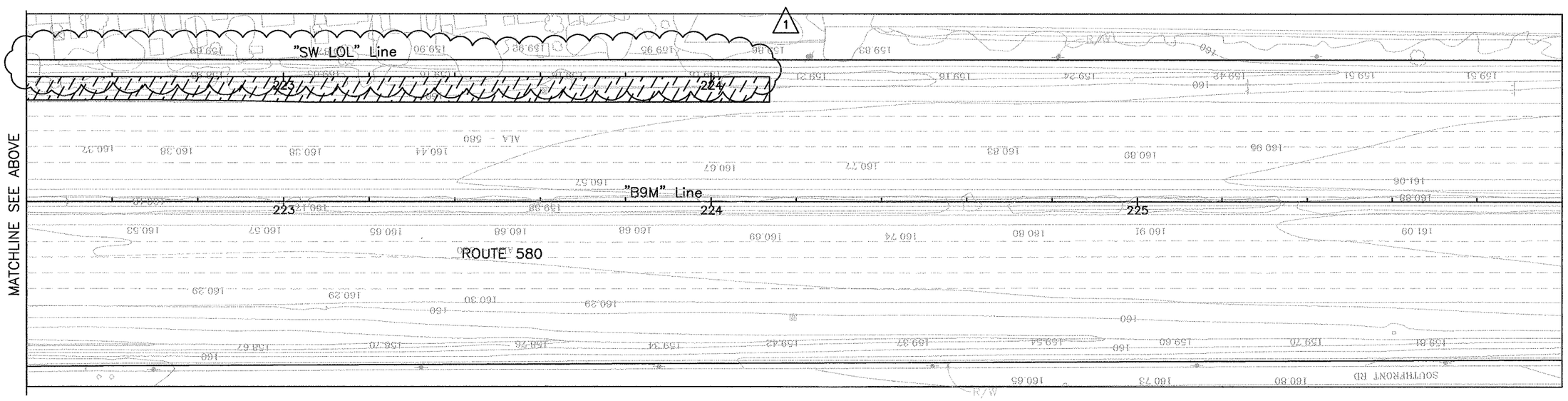

1 ADDENDUM NO. 1 – SEPTEMBER 8, 2006

ALL DIMENSIONS ARE IN METERS UNLESS OTHERWISE SHOWN

EROSION CONTROL PLAN

SCALE 1:500

EC- 1

THIS PLAN ACCURATE FOR EROSION CONTROL WORK ONLY

FOR REDUCED PLANS ORIGINAL SCALE IS IN MILLIMETERS 0 20 40 60 80

USERNAME => $USER
DGN FILE => $REQUEST

CALCULATED/ DESIGNED BY	SM	DATE 7/06	REVISED BY	SM	9/06
CHECKED BY	NMS	7/06	DATE REVISED		

FILE: P:\320076\Sheets\SW259\Addendum 1\580SW259EC01.dgn
DATE: 06-Sep-06 15:14

LAST REVISION 00-00-00

COUNTY	ROUTE	KILOMETER POST TOTAL PROJECT	SHEET No	TOTAL SHEETS
Ala	580	R16.5/16.9	11	21

REGISTERED CIVIL ENGINEER 8/15/06

PLANS APPROVAL DATE

REGISTERED PROFESSIONAL ENGINEER Michele O. Johnson No. C69116 Exp. 06/30/08 CIVIL STATE OF CALIFORNIA

ALAMEDA COUNTY CONGESTION MANAGEMENT AGENCY
1333 BROADWAY, SUITE 220
OAKLAND, CA 94612

T Y LIN INTERNATIONAL | CCS
2010 CROW CANYON PLACE SUITE 350
SAN RAMON, CA 944583

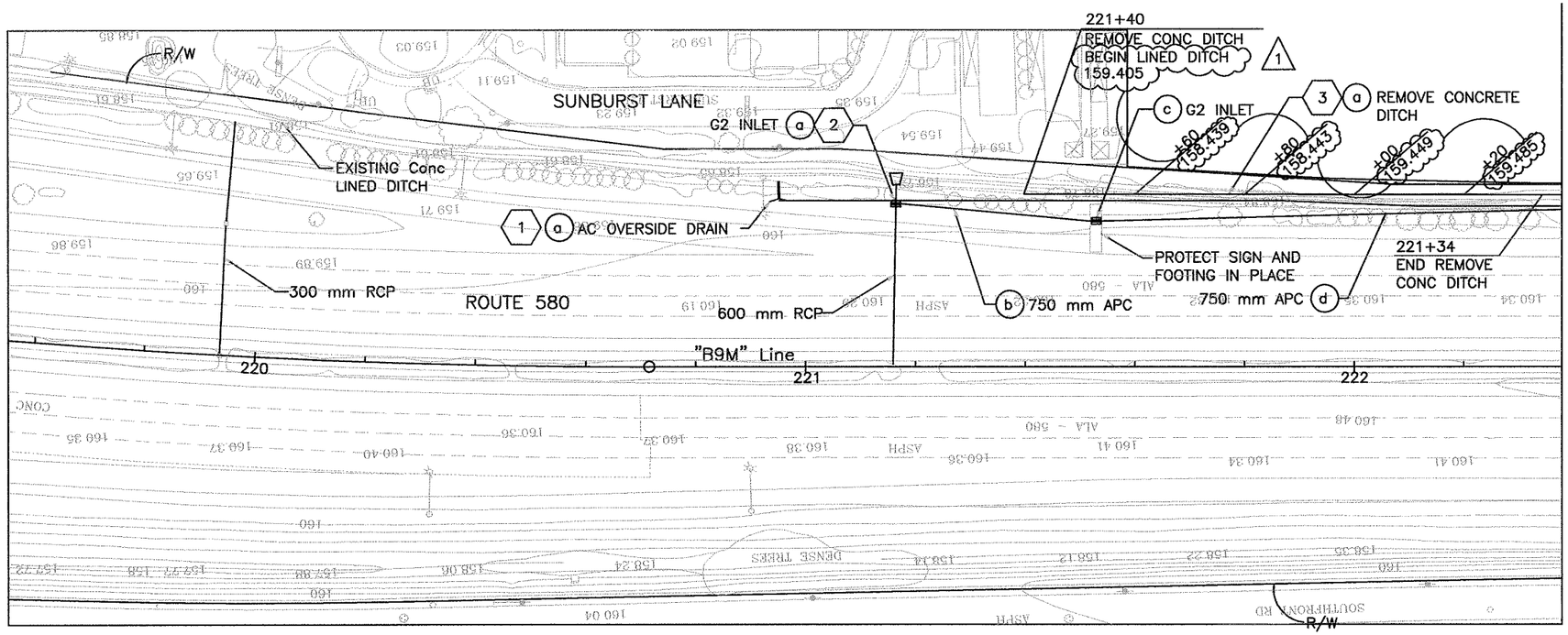

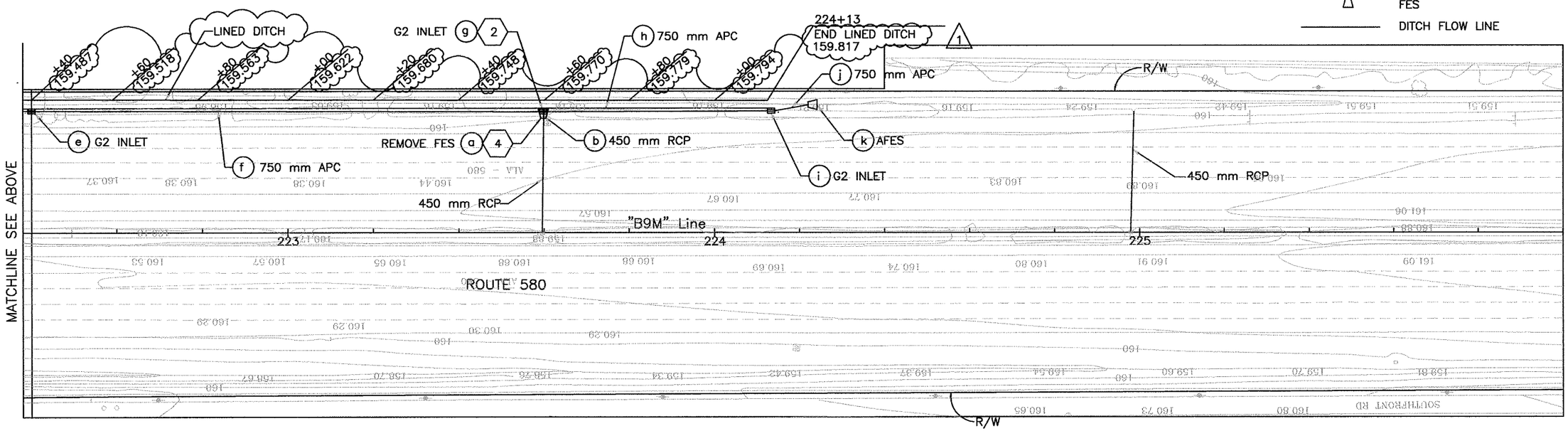

NOTES:

1. LOCATIONS OF EXIST DRAINAGE FACILITIES SHOWN ON THESE PLANS ARE APPROXIMATE AND SHALL BE VERIFIED BY THE CONTRACTOR PRIOR TO CONSTRUCTION.
2. CONNECT ALL EXISTING EDGE DRAIN OUTLETS TO PROPOSED PIPE (TYPE E OUTLET CONNECTION).

LEGEND:

- (2) DRAINAGE SYSTEM No.
- (a) DRAINAGE UNIT No.
- EXISTING STORM DRAIN
- FES
- DITCH FLOW LINE

1 ADDENDUM NO. 1 – SEPTEMBER 8, 2006

ALL DIMENSIONS ARE IN METERS UNLESS OTHERWISE SHOWN

DRAINAGE PLAN

SCALE 1:500

D- 1

THIS PLAN ACCURATE FOR DRAINAGE WORK ONLY

CALCULATED/ DESIGNED BY	SM	DATE 7/06	REVISED BY	SM
CHECKED BY	NMS		DATE REVISED	9/06

FILE: P:\320076\Sheets\SW259\Addendum 1\580SW259D01.dgn
DATE: 06-Sep-06 15:15
LAST REVISION 00-00-00

FOR REDUCED PLANS ORIGINAL SCALE IS IN MILLIMETERS 0 20 40 60 80

USERNAME => $USER
DGN FILE => $REQUEST

COUNTY	ROUTE	KILOMETER POST TOTAL PROJECT	SHEET No	TOTAL SHEETS
Ala	580	R16.5/16.9	13	21

REGISTERED CIVIL ENGINEER 8/15/06

PLANS APPROVAL DATE

REGISTERED PROFESSIONAL ENGINEER Michele O. Johnson No. C69116 Exp. 06/30/08 CIVIL STATE OF CALIFORNIA

ALAMEDA COUNTY CONGESTION MANAGEMENT AGENCY
1333 BROADWAY, SUITE 220
OAKLAND, CA 94612

T Y LIN INTERNATIONAL | CCS
2010 CROW CANYON PLACE SUITE 350
SAN RAMON, CA 944583

CALCULATED/DESIGNED BY	SM	DATE 7/06	REVISED BY	SM
CHECKED BY	NMS	7/06	DATE REVISED	9/06

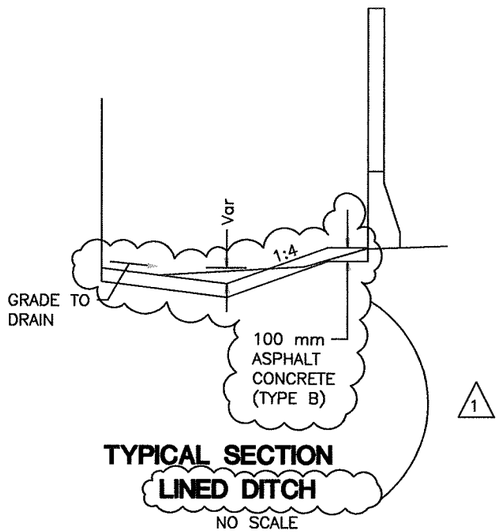

TYPICAL SECTION
LINED DITCH
NO SCALE

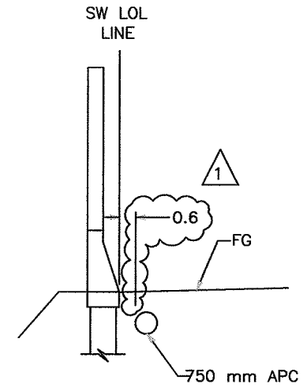

TYPICAL SECTION
APC LOCATION
NO SCALE

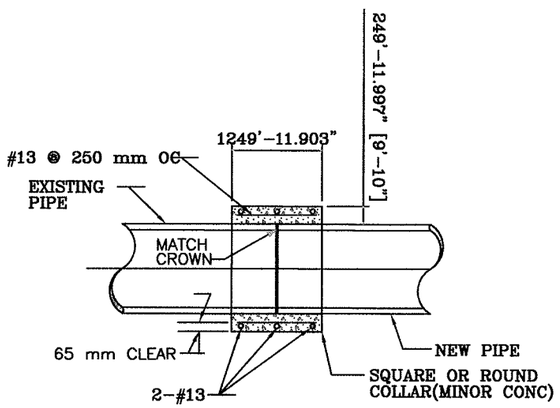

CONCRETE COLLAR DETAIL

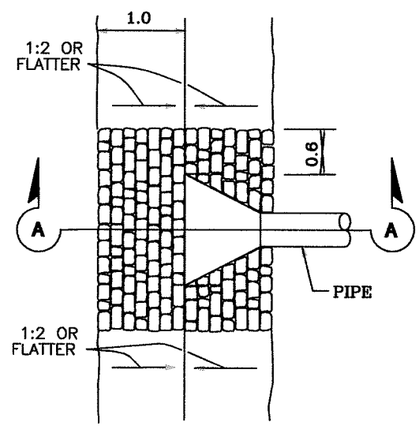

PLAN

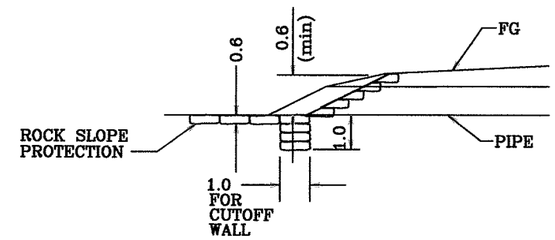

SECTION A–A

AFES WITH ROCK SLOPE PROTECTION

ALL DIMENSIONS ARE IN METERS UNLESS OTHERWISE SHOWN

DRAINAGE DETAILS

NO SCALE

DD- 1

FOR NOTES, ABBREVIATIONS ANE/OR LEGEND, SEE SHEET D-1

1 ADDENDUM NO. 1 – SEPTEMBER 8, 2006

FILE: P:\320076\Sheets\SW259\Addendum 1\580SW259DD01.dgn
DATE: 06-Sep-06 15:15
LAST REVISION 00-00-00

FOR REDUCED PLANS ORIGINAL SCALE IS IN MILLIMETERS 0 20 40 60 80

USERNAME => $USER
DGN FILE => $REQUEST

COUNTY	ROUTE	KILOMETER POST TOTAL PROJECT	SHEET No	TOTAL SHEETS
Ala	580	R16.5/16.9	19	21

REGISTERED CIVIL ENGINEER 8/15/06

PLANS APPROVAL DATE

REGISTERED PROFESSIONAL ENGINEER Michele O. Johnson No. C69116 Exp. 06/30/08 CIVIL STATE OF CALIFORNIA

ALAMEDA COUNTY CONGESTION MANAGEMENT AGENCY
1333 BROADWAY, SUITE 220
OAKLAND, CA 94612

T Y LIN INTERNATIONAL | CCS
2010 CROW CANYON PLACE SUITE 350
SAN RAMON, CA 944583

EARTHWORK QUANTITIES

STATION	ROADWAY EXCAVATION	EMBANKMENT
	m^3	m^3
B9M 220+95 TO 224+14	37.03	731.97
TOTAL	37.03	731.97
BALANCE		694.94

1

ROADWAY QUANTITIES

STATION	AC (TYPE B)
	TONNE
B9M 220+95 TO 224+14	312
TOTAL	312

1

EROSION CONTROL

DESCRIPTION	m^2	m	EA
EROSION CONTROL (TYPE D)	1773		
TEMPORARY COVER	800		
TEMPORARY SILT FENCE		49	
TEMPORARY CHECK DAM (TYPE 2)		50	
TEMPORARY CONSTRUCTION ENTRANCE			2
TEMPORARY CONCRETE WASHOUT FACILITY			1

1

TEMPORARY RAILING (TYPE K)

SHEET No.	STATION	LOCATION	LENGTH
			m
TH-1	B9M 220+75 TO 224+83	Lt	408

SOUND WALL QUANTITIES

SOUND WALL No.	SOUND WALL (BARRIER) (MASONRY BLOCK)	400 mm CIDH	600 mm CIDH	BAR REINFORCING (BRIDGE)	MINOR CONC (SOUND WALL)	CONC BARRIER (TYPE 736 S)
	m^2	m	m	kg	m^3	m
259	1279	961	26	1270	5.7	319

METAL BEAM GUARD RAILING

SHEET No.	STATION	LOCATION	RECONSTRUCT MBGR
			m
SW-1	B9M 221+49.34 TO 221+62.78	Lt	24

1 ADDENDUM NO. 1 – SEPTEMBER 8, 2006

ALL DIMENSIONS ARE IN METERS UNLESS OTHERWISE SHOWN

SUMMARY OF QUANTITIES

NO SCALE

Q-1

CALCULATED/ DESIGNED BY	SM	DATE 7/06	REVISED BY	SM	9/06
CHECKED BY	NMS	7/06	DATE REVISED		

FOR REDUCED PLANS ORIGINAL SCALE IS IN MILLIMETERS 0 20 40 60 80

USERNAME => $USER
DGN FILE => $REQUEST

FILE: P:\320076\Sheets\SW259\Addendum 1\5905W259Q01.dgn
DATE: 08-Sep-06 16:14

LAST REVISION 00-00-00